AMERICAN ACCESS SYSTEMS, INC.

ADVANTAGE DKE

INSTALLATION AND PROGRAMMING INSTRUCTIONS

MODEL
26-100m

Techinal Support: 303-799-9757 Monday thru Friday 8:00 a.m. to

PLEASE READ BEFORE USING THIS EQUIPMENT

AAS 2-Year Limited Warranty

What item(s) this warranty applies to:
American Access Systems "Advantage DKE" access controls.

What is covered:
Any defect in materials or workmanship.

For how long:
Two years from date of purchase.

What we will do:
If your AAS product is defective and returned within 2 years of the date of purchase, we will repair it or, at our option, replace it at no charge to you. If we repair your AAS product, we may use new or reconditioned parts. If we choose to replace your AAS product, we may replace it with a new or reconditioned one of the same or similar design. The repair or replacement will be warranted for (a) 90 days or (b) the remainder of the original two year warranty period, whichever is longer.

Limitations:
Implied warranties, including those of fitness for a particular purpose and merchant ability (an unwritten warranty that the product is fit for ordinary use), are limited to two years from date of purchase. We will not pay for loss of time, inconvenience, loss of use of your AAS product, service calls, or property damage caused by your AAS product or its failure to work, or any other incidental or consequential damages. Some states do not allow limitations on how long an implied warranty lasts or the exclusion or limitation of incidental or consequential damages, so the above exclusions or limitations may not apply to you.

What we ask you to do:
To get warranty service for your AAS product, you muse provide proof of the date of purchase. Contact the original dealer or installer of the product and return your AAS product along with the receipt to them. If you have problems locating the dealer or installer contact American Access Systems at (303) 799-9757 and we will direct you to an authorized dealer or distributor of American Access Systems products. If you ship your AAS product, you must prepay all shipping costs. We suggest that you retain your original packing material in the event you need to ship your AAS product. On return, include your name, address, phone number, proof of date of purchase, and a brief description of the operating problem.

What this warranty does not cover:
This warranty does not cover defects resulting from accidents, damage while in transit, alterations, unauthorized repair, failure to follow instructions, misuse, fire, flood, or acts of God. Nor do we warrant your AAS product to be compatible with any particular external device or peripheral. If your warranty has expired on your AAS product or if your product is NOT covered contact your dealer or installer for advice on whether we will repair your AAS product and other repair information, including estimated repair costs and other charges. We, at our option, may replace rather than repair your AAS product with a new or similar design if the damage to the unit is severe or extensive.

This warranty is the only one we give on this product, and it sets forth all our responsibilities regarding your AAS product. There are no other express warranties.

State Law rights:
This warranty gives you specific legal rights, and you may also have other rights which vary from state to state.

AMERICAN ACCESS SYSTEMS, INC.
7079 SOUTH JORDAN ROAD / UNIT 6
ENGLEWOOD, CO. 80112
PH: (303) 799-9757
FAX: (303) 799-9756

Serial # _____

PARTS CHECKLIST

Enclosed with this box you should have the following items.

Qty	Description
1	Control Station
4	1/4 by 1/2 carriage bolts (Post mount units only)
4	1/4-20 hex nuts (Post mount units only)
1	Square mounting flange (Post mount units only)

If any of the above items are missing from this box, contact American Access Systems

---

TOOLS YOU WILL NEED

Wire nuts or appropriate connectors

Wire strippers

Wire cutters

3/8" drive ratchet with 6" extension and 7/16" socket
(Post mount units only)

Digital or Analog multi-meter

STEP 1-MOUNTING THE UNIT

Page 3 tells you what tools and instruments you will need to install your unit and presents a parts check list. Make sure to have all the tools listed. Upon opening the box, check off the items enclosed with the unit. If any items are missing from your unit, contact American Access Systems immediately.

Mounting the unit to your own pedestal

Your unit comes with a square mounting flange found in the bottom of the box along with four carriage bolts and four hex nuts. The square mounting flange may be welded to your pedestal and the flange bolt pattern will align with the back of the unit. Place the unit up to the flange and insert the carriage bolts from the back side. Secure the unit to the flange by tightening down the hex nuts with a 7/16" socket.

Mounting the unit to an AAS gooseneck (18-001) or double height (18-003)pedestal

Locate the four carriage bolts and four hex nuts found inside the unit box. Place the unit up to the pedestal flange and insert the four carriage bolts from the backside. Secure the unit to the pedestal using the four hex nuts and a 7/16" socket. The extra square mounting flange may be discarded.

Mounting the unit to an AAS diagonal pedestal (18-002)

Locate the four bolts provided with the pedestal. Place the unit up to the pedestal so that the unit hole pattern aligns with the pre-tapped pedestal bolt holes. Insert the pedestal bolts from the inside of the unit and tighten down with a 7/16" socket. The extra square mounting flange, four carriage bolts, and four hex nuts provided inside the unit box may be discarded.

STEP 2-SYSTEM CONNECTIONS

Study the WIRING COLOR CODE chart below and then proceed to the hookup steps.

(TABLE 1)
WIRING COLOR CODES

WHITE	12 - 24 VOLTS
WHITE	AC or DC

LATCH CONTACTS

BROWN	RELAY COMMON
ORANGE	NORMALLY OPEN
BLUE	NORMALLY CLOSED

18-001

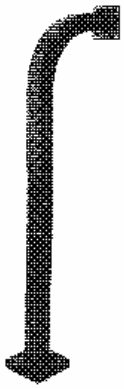

18-003

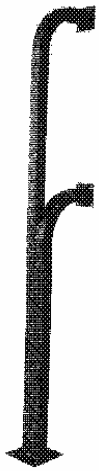

HOOKUP STEPS

(A). Your DKLP control unit operates on 12 to 24 volts AC or DC. Measure the voltage from the power source to make sure it falls within these tolerances. Locate the two white wires on the circuit board and with the power off connect them to a constant power supply.

OPERATOR WIRING DIAGRAM

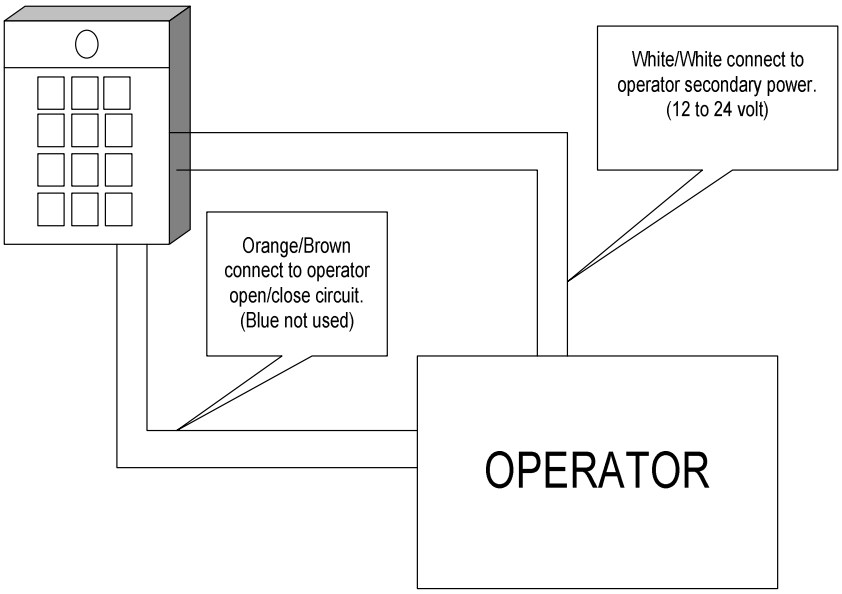

(B). Connect the device to be controlled to the appropriate control leads of the 26-100 (See above diagram).

(C). Double Check your connections. When you are sure that everything is hooked up correctly, apply power to the unit. A BEEP should be heard when you press a key on the keypad.

THE MASTER CODE AND ACCESS CODES

Your unit may be programmed with 100 multiple (4 digit) **ACCESS CODES** . The **MASTER CODE** is a 4 digit programmable code used for accessing the program mode. **Note: The model number of the unit is located on the inside face of the unit. Note: The *Master Code* will not activate the relay!**

SETTING OR RESETTING THE MASTER CODE

To set or reset the master code back to the **factory default of 1 2 5 1** should you ever loose or forget you master code. To do this follow these steps: (SEE PAGE 7 FOR LOCATION DIAGRAM)

(1). Disconnect power from the unit by disconnecting power from circuit board.
(2). Reconnect power while holding down the PROGRAM/RESET button.
(3). A single keybeep will be heard from the unit indicating that the master has been reset

GOODBEEPS AND ERRORBEEPS

A standard beep will be heard each time a key is pressed. A **"GOODBEEP"** is represented by a series of quick beeps in succession. An **"ERRORBEEP"** is represented by a single long beep.

THE IDLE MODE

The idle mode is the normal mode of operation. When in this mode the unit sits and waits for data from the keypad. If a key is pressed from the keypad, you will have approximately 3 seconds between each keypress before the unit resets.

THE PROGRAM MODE

The program mode is the mode of operation in which you will enter/change your access code. Upon entry, a GOODBEEP will heard. A GOODBEEP will also be heard when you exit the program mode unless a keypress timeout occurs in which case you will receive an ERRORBEEP. The program mode is accessed by entering the "MASTER CODE" from the keypad. If the master code is valid, you will receive a GOODBEEP from the unit. In this mode you will have approximately 15 seconds between keypresses. If this time is exceeded, you will receive an ERRORBEEP and the unit will exit the program mode and return to the idle mode. To exit the program mode at any time, press #.

THE * AND # KEYS

The * and # keys serve specific functions while in the idle or program mode. The * key is always the clear key. You should use this key if you make an entry error. The # key also serves as the clear key in the idle mode. In the program mode however, it serves as the exit key and will at any time when depressed, exit you from the program mode.

PROGRAMMING

A person desiring a access to the program mode will enter the present MASTER CODE. If the master code is valid a GOODBEEP will be heard prompting the person to enter a number corresponding to the SUB-MODE, **eg. (MASTER CODE) + (Number corrresponding to Sub-Mode)**. Once in the program mode the individual will have approximately 15 seconds between keypresses or the unit will sound an ERRORBEEP and exit the program mode. **NOTE: An access code log sheet is provided on page 8 which can be photo-copied. A good source for access codes is the phone book or the last 4 digits of social security numbers. Note: The *Master Code* will not activate the relay!**

SUB-MODES

"1"

Sub-Mode 1 (Enter New Access Codes)

To enter new access codes enter the MASTER CODE, followed by 1, then enter each new ACCESS CODE you wish to program into the unit.

(MASTER CODE) + 1 + (ACCESS CODE) + (ACCESS CODE) etc... (# to exit)

Should you make an entry error, simply press the * key and re-enter the correct data. You may continue entering access codes until the memory is full or the # is pressed. You may select any 4 digit access code that is not already in use by the system. The unit will respond with a GOODBEEP with the acceptance of each new access code. If you do not receive a GOODBEEP after the entry of an access code, you must select a new access code as it is already in use by the system. When the memory becomes filled, you will receive a GOODBEEP indicating the acceptance of the last access code entered and then the unit will sound an ERRORBEEP and automatically exit you from the program mode. **NOTE: You will not be able to enter this mode if memory is full and will receive an ERRORBEEP.**

"2"

Sub-Mode 2 (Delete Access Codes)

To delete any access code from memory enter the MASTER CODE, followed by 2, and then each access code to be deleted

(MASTER CODE) + 2 + (CODE TO BE DELETED) + (NEXT CODE TO BE DELETED) etc... (# to Exit)

Should you make an entry error, simply press the * key and re-enter the correct data. You may continue deleting access codes in a successive manner. The unit will respond with a GOODBEEP with the successful deletion of each

access code. If you do not receive a GOODBEEP the access code entered could not be found in memory and the unit will wait for you to enter another code to be deleted.

"3"

Sub-Mode 3 (Change Master Code)

To change the master code enter the PRESENT MASTER CODE, followed by 3, and then the NEW MASTER CODE.

(PRESENT MASTER CODE) + 3 + (NEW MASTER CODE)

Should you make an entry error, simply press the * key and re-enter the correct data. You may select any 4 digit code as your new master code that is not already in use by the system. The unit will respond with a GOODBEEP upon acceptance of the new master code and automatically exit from the program mode. If the unit does not respond with a GOODBEEP, you must select a different code as it is already in use by the system.

"4"

Sub-Mode 4 (Set Relay Output Time from 1/2 to 9 seconds)

To set the relay output time in seconds enter the PRESENT MASTER CODE, followed by 4, and then the relay output time in seconds. NOTE: "0" = 1/2 seconds.

(PRESENT MASTER CODE) + 4 + (RELAY OUTPUT TIME)

Should you make an entry error, simply press the * key and re-enter the correct data. You may enter any single digit value corresponding from 1/2 to 9 seconds of total length output time. Please note that when you enter "0", the output time is set to 1/2 seconds.

"5"

Sub-Mode 5 (Set Latch Code)

EXPLANATION: The Latch Code toggles the state of the main relay (A) of the circuit board. The red LED will light if the relay is in the latched position. The latch code is useful in applications where the gate is desired to hold open. If the operator's close circuit is controlled by loops, timers, etc., they will be overridden by the latched state of the relay and the gate will hold open. An "OPEN-OVERRIDE" circuit must exist in the operator in order to utilize this function. If your gate cycles when this code is entered, your operator is not set up to utilize this function. Your local dealer or distributor should be able to assist you if you have any specific questions.

To program or change your latch code enter the following;

(MASTER CODE) + 5 + (LATCH CODE)

Should you make a code entry error, simply press the * key and enter the correct code. You may select any 4 digit latch code you wish. If you receive an ERROR, you must select another code as it is already in use. The unit will respond with a GOOD BEEP with the acceptance of the new Latch Code and you will be exited from the program mode. **NOTE: On gates with a timer to close the "TIMED DURATION" starts when the latch code is released.**

"0" **Sub-mode 0 (Clear memory)** **!!!! WARNING ALL ACCESS CODES WILL BE DELETED !!!!**

To delete all access codes from memory enter the MASTER CODE, followed by 0, and the re-enter the MASTER CODE.

(MASTER CODE) + 0 + (MASTER CODE)

Should you make an entry error, simply press the * key and re-enter the correct data. If the second entry of the master code is correct there will be a short pause before a GOODBEEP is heard and then the unit will automatically be exited from the program mode. If the second entry of the master code is incorrect, the unit will still respond with a

30-023 Board Layout

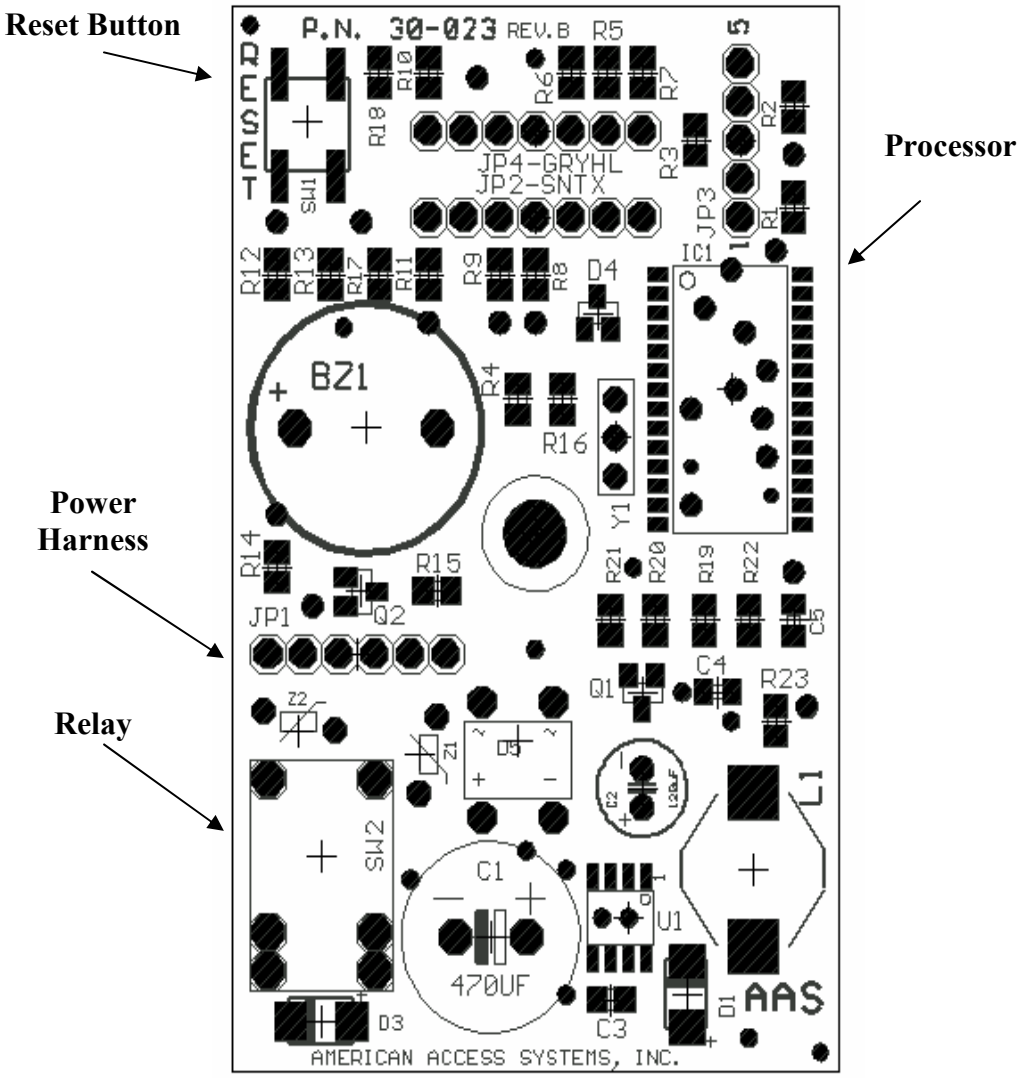

MASTER CODE _____

Notes:

Notes:

American Access Systems Inc.
7079 South Jordan Road #6
Englewood, Co. 80112

Sales: 1-800 541-5677
E-mail: sales@americanaccess.com

Customer Service: 1-303-799-9757
E-mail: customerservice@americanaccess.com

Tech-Support: 1-303-799-9757
E-mail: techsupport@americanaccess.com