INSTALLATION AND OWNER'S MANUAL

Twist'R Plus

Class I Vehicular Swing Gate Operator
Model RS4000

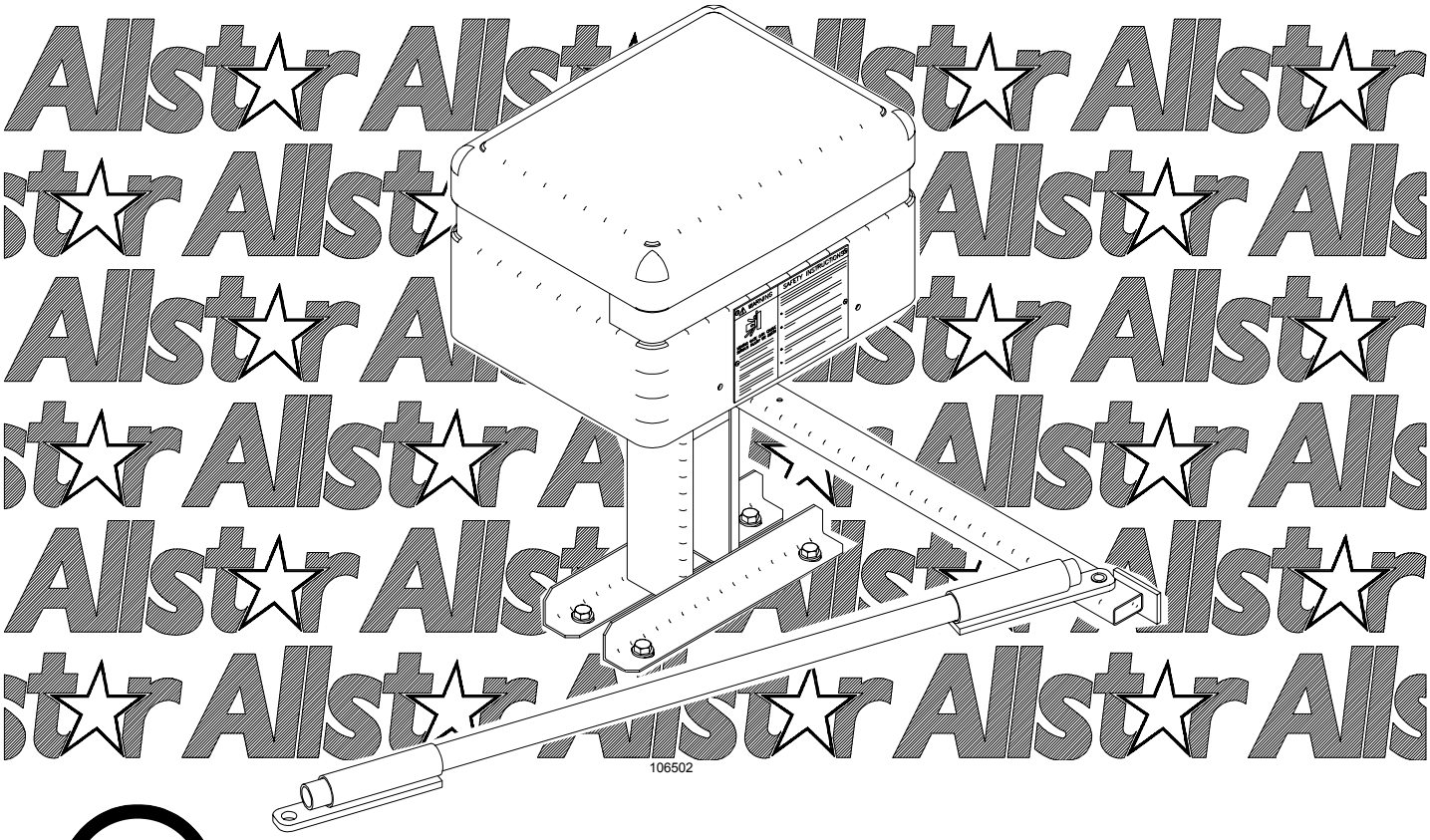

c UL US
LISTED

New - Allstar's CGA2K™ TECHNOLOGY!
Meets all March 1, 2000 UL325 requirements.

Serial #:	
Date Installed:	
Your Dealer:	

As of date of manufacture, meets all ANSI/UL 325 Safety Requirements for Vehicular gate operators

READ THIS MANUAL CAREFULLY BEFORE INSTALLATION OR USE

SAVE THESE INSTRUCTIONS

TABLE OF CONTENTS

Pre-Installation Notes 3
Operator Class Information 3
Section A: Gate System Design/Installation 4
Section B: Preparing the Site.....6
The Concrete Operator Pad 6
Alternate Post Mount.....6
Placing the Vehicle Detector Loops 7
Vehicle Detector Loop Blanking (Shadow) 8
Electrical Power Requirements 8
Section C: Installing the Operator 9
Placing the RS4000 Pedestal Unit 10
Installing the Gate Arm Kit.....11
Electrical Hookup 12
Wiring Diagram 12
Lightning Protection.....13
Right/Left Hand Installations 13
Synchronous Operation (Master/Slave) 13
Accessory Equipment Hookup 14
Terminal Strip Reference Chart.....15 & 16
Section D: Starting the Operator..... 16
Setting the Limit Switches..... 16
Setting the Adjustable Torque Drive..... 17
Running the RS4000 Plus 18
Maximum Run Timer 19
Final Setting of Close Timer 19
Section E: Auxiliary Equipment 19
Section F: End User Instructions 19
Operational Guide for the End User..... 19
Safety Guide for the End User..... 20
Optional Arm Disconnect Feature..... 21
RS4000 Exploded View & Parts List..... 22
Technical Specifications..... 24

WARNING HIGH VOLTAGE

ONLY A QUALIFIED TECHNICIAN SHOULD SERVICE THIS GATE OPERATOR

PERIODICALLY TEST SENSITIVITY OF OVERLOAD
***** READ MANUAL *****

LOG DATE OVERLOAD TEST				DATES OPERATOR SERVICED
DATE TESTED	DATE TESTED	DATE TESTED	DATE TESTED	

Figure 1

READ THESE STATEMENTS CAREFULLY AND FOLLOW THE INSTRUCTIONS CLOSELY.

The Warning and Caution boxes throughout this manual are there to protect you and your equipment. Pay close attention to these boxes as you follow the manual.

WARNING	CAUTION	WARNING	CAUTION
Indicates a MECHANICAL hazard of INJURY OR DEATH. Gives instructions to avoid the hazard.	Indicates a MECHANICAL hazard of DAMAGE to your gate, gate operator, or equipment. Gives instructions to avoid the hazard.	Indicates an ELECTRICAL hazard of INJURY OR DEATH. Gives instructions to avoid the hazard.	Indicates an ELECTRICAL hazard of DAMAGE to your gate, gate operator, or equipment. Gives instructions to avoid the hazard.

PRE-INSTALLATION NOTES

The Twist'R Plus (Model RS4000) Vehicular Gate Operator will provide convenience and assurance to the ultimate users for many years. It is ruggedly built of the finest materials and has been thoroughly inspected and tested at the factory. It has many features that will aid in the installation and testing of the complete gate system. The RS4000 has been designed and built to comply with the UL325 Standard For Safety, Fourth Edition, revised March 1, 2000 as established by Underwriters Laboratory Inc..

NOTICE

BEFORE ATTEMPTING INSTALLATION, READ THIS MANUAL CAREFULLY SO YOU WILL BE THOROUGHLY FAMILIAR WITH THE FEATURES OF THE TWIST'R PLUS AND IT'S PROPER INSTALLATION PROCEDURES.

The RS4000 Vehicular Swing Gate Operator is designated a Class I Vehicular Swing Gate Operator, and is intended to operate a vehicular swing gate installed on a residential home, maximum of four single families in the dwelling, or a garage or parking area associated with that home, or a similar location with respect to the cycle usage (see below). Allstar manufactures operators for the three other Class designations (as defined by UL325); Class II (high cycle usage commercial location or multi-family home); III (industrial location not intended to service the general public); and IV (secure or restricted access locations, ie. airports and prisons). The RS4000 operator cycle usage is rated at a maximum of 10 cycles per hour, 50 cycles maximum per day.

Because the RS4000 (as well as gate operators sold by other manufacturers) is designed to start and move gates weighing as much as 300 pounds and 16 feet in length. As such, the RS4000 is capable of producing high levels of force. It is important in the design of the total gate system that designers, installers and users be aware of the hazards that may be associated with the **IMPROPER** design, installation and use of Vehicular Gate systems and Gate Operators.

The gate operator is only one part of a complete automatic gate operating system. As each location and usage is different, a properly designed system will include all applicable safety enhancement devices.

As the designer and installer of the **GATE SYSTEM**, you must advise the purchaser on the proper use of the gate system. You also have the primary responsibility of insuring that **ALL** possible operational hazards have been considered and eliminated.

The RS4000 CGA2K™ technology provides several features that can help reduce the hazards of your gate system.

Built-In Adjustable Torque Limiting Drive System

The RS4000 is provided with a adjustable torque limiting drive system that may be adjusted to "slip" when an obstruction is encountered. This system, however, must not be considered as the primary obstruction sensing system. Consider all available options (electric leading edges, photoelectric sensors, protective screen mesh, etc.) to eliminate hazards in your gate system design.

The torque limiting drive system also serves to protect the mechanical components of the operator.

The torque limiting drive setting is an adjustable setting that must be determined at the time of installation. This setting must be tested periodically to ensure proper operation. The more freely the gate will move the more sensitive the setting can be made. See Page 17.

ADVISE THE PURCHASER TO CHECK THE SENSITIVITY OF THE GATE OPERATION PERIODICALLY AND THEN LOG THE DATE TESTED IN THE TABLE on page 2. (See Figure 1)

NOTICE

THE IMPORTANT SAFEGUARDS AND INSTRUCTIONS IN THIS MANUAL CANNOT COVER ALL POSSIBLE CONDITIONS AND SITUATIONS WHICH MAY OCCUR DURING ITS USE. IT MUST BE UNDERSTOOD THAT COMMON SENSE AND CAUTION MUST BE EXERCISED BY THE PERSON(S) INSTALLING, MAINTAINING AND OPERATING THE EQUIPMENT DESCRIBED HEREIN. DO NOT USE THIS EQUIPMENT FOR ANY OTHER THAN ITS INTENDED PURPOSE — OPERATING A SWING GATE.

Connections for External Entrapment Prevention Sensors

Because all gate system installations are different, the RS4000 control panel provides independent connections for Open and Close contact (edge) sensors and Close non-contact (photoelectric) sensors. In this way a photoelectric sensor could be utilized to guard the gate area when closing and an edge sensor would provide the protection when opening. Depending on the particular application a combination contact and non-contact sensor protection system for the open and close directions may provide more effective entrapment protection than a single device for both directions. See pages 4, 5, 14, 15, 16, 20, and 21.

SMART™ Self adjusting MAximum Run Timer (Patent Pending)

The RS4000 has a **S**elf adjusting **MA**ximum **R**un **T**imer, SMART™ (patent pending). The amount of time for the first few cycles of operation are registered and averaged within the motor controller circuitry. After the first few initial cycles, if the gate is activated and no other command is given or an end limit (open or close) is not reached in the previously counted cycle time plus approximately 4 seconds, the operator will be turned off. See page 19.

OTHER FEATURES

Auto Close Timer: Adjustable from 2 to 60 seconds, provides an automatic closure of the gate from the full open position. See page 18.

Synchronous Operation (Master/Slave): Two RS4000 units can be wired together to operate as one system, with one unit controlling the movement of both. Additionally, the installer can customize the installation of the external entrapment protection devices. These devices can be wired to the controller operator or alternately to the individual units as the situation dictates or the end user requires. See Page 13.

GATE SYSTEM DESIGN / INSTALLATION

WARNING!

TO REDUCE THE RISK OF SEVERE INJURY OR DEATH: READ AND FOLLOW ALL INSTALLATION INSTRUCTIONS AND GATE SYSTEM DESIGN PARAMETERS!

GATE SYSTEM DESIGN AND INSTALLATION SAFETY CHECK LIST:

- The RS4000 operator may be installed on a Class I Vehicular Swing Gate. See page 3 for an explanation of the different Class locations. See the last page of this manual for the operator specifications (voltage, maximum gate weight & length etc.).
- Make sure that the gate moves freely, all hinges are in good working order, the gate does not bind in any manner and the gate swing area is clean and free of irregularities. DO NOT INSTALL THE OPERATOR UNTIL ALL GATE PROBLEMS HAVE BEEN CORRECTED.
- Do not increase the built-in overload detector adjustment or overtighten the torque limiter to compensate for a poorly working gate. A well maintained gate will ensure easy manual operation (if needed) and maximum operator obstruction sensitivity.
- Install the operator on the inside of the property/fence line. DO NOT install an operator on the public side of the fence line or gate. Outward swinging gates should not open into public areas.
- Make sure the gate operating system is placed far enough back from the road to eliminate traffic backup. The distance from the road, size of the gate, usage level and gate cycle/speed must be taken into consideration to eliminate potential hazards.
- The gate must be installed in a location so that enough clearance is supplied between the gate and any adjacent structures when opening and closing to reduce the risk of entrapment.

106503

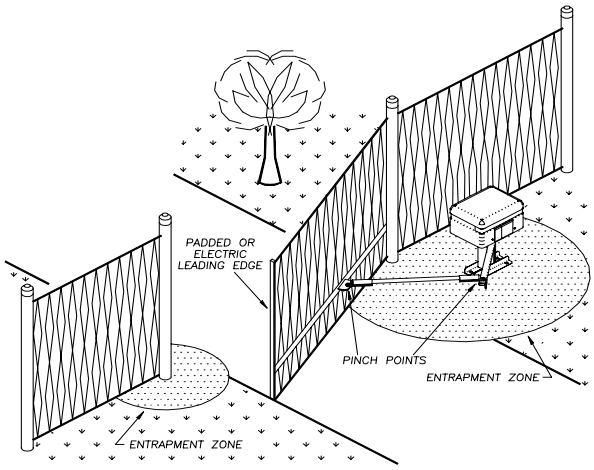

Figure 3: Entrapment Zones and Pinch

104949

Figure 2

- For ORNAMENTAL "GRILL TYPE" GATES (or any other type of open gate where a handhold or toehold may be achieved), injuries may occur when people put arms through the openings or children "ride" the gate by standing on the bars and holding on to the gate. THIS POTENTIAL HAZARD CAN BE MINIMIZED BY INSTALLING A MESH SCREEN ON THE GATE. Allstar strongly recommends the entire gate and adjacent fence area the gate covers when open be meshed or guarded such that a handhold or toehold cannot be achieved. See Figure 2.
- All Allstar gate operators are VEHICULAR GATE OPERATORS and as such are NOT RECOMMENDED FOR PEDESTRIAN traffic. In installations where pedestrians are likely to be nearby, install a pedestrian gate and use leading edge detectors and/or photocells in your design to protect system entrapment zones. Allstar can provide these products for incorporation in your design.
- Use the illustration at left (Figure 3) to minimize the risk of injury in your design of the swing gate operator system. IDENTIFY THE ENTRAPMENT ZONES AND PINCH POINT AREAS IN YOUR GATE. Design the gate installation to minimize the risk of entrapment in these areas. Install additional safety equipment such as four wire edges and photocells to further minimize risk. All entrapment zones are required to be protected.
- **Entrapment Zones:** Design in personal entrapment protection devices to protect people from entrapment in the zones shown in Figure 3 at left.
- **Pinch Points:** Use protective measures (guards, padded edges, etc.) to protect people from the pinch points shown in Figure 3 at left.

- SWING GATES HAVE THE POTENTIAL HAZARD OF HANDS AND FINGERS BEING PINCHED between the gate edge and the post to which the gate is mounted. It is recommended that the hinges be mounted so that this opening increases as the gate swings open. **PROTECT THIS "PINCH POINT" SO THIS HAZARD IS MINIMIZED.** See Figure 3.
- CONSIDER ALL OTHER "PINCH POINTS" IN YOUR DESIGN of the gate system. Observe the arm as it opens and the two arm pieces swing past each other. Use protective measures to reduce hazards at this location. Restrict access to the arm motion. See Figure 3.
- DO NOT consider the adjustable torque limiter as the primary defense system. Consider all options in the gate system design.
- DO NOT connect any auxiliary equipment to the RS4000 (detectors, card readers, etc.) until the gate operator and all its functions are fully tested. Only connect one device at a time and ensure its proper function(s) before moving on to the next device.
- DO NOT locate any control device (key switch, switch, key pad, card reader, etc.) in a position where it may be activated by a person reaching through the gate or while touching the gate in any manner. Locate all control devices a minimum of 10 feet from the gate when opened or closed.
- Outdoor or easily accessible controls must be of the security type to prevent unauthorized use of the system.
- Install all devices that will open or close the gate in such a manner that THE GATE WILL BE IN FULL VIEW WHEN THE DEVICE IS OPERATED.
- Before activating the "timer to close" option of the RS4000, ENSURE THE PERSONAL ENTRAPMENT PROTECTION DEVICES (operator reversing feature, edges, photocells) ARE OPERATING and install VEHICLE DETECTOR LOOPS AND VEHICLE DETECTORS for protection of user vehicles. Read the manual for information on the installation of these devices. IF VEHICLE DETECTOR LOOPS HAVE BEEN INSTALLED TO PREVENT THE GATE FROM CLOSING ON A VEHICLE, INSTRUCT THE USER TO PERIODICALLY CHECK THE OPERATION OF THE DETECTORS.
- USE EXTREME CAUTION WHEN WORKING NEAR THE BELTS AND PULLEYS when the operator cover is removed. Apply power to the operator only when instructed to do so.
- When the RS4000 Control Box cover is removed, high voltage will be exposed. EVEN IF THE RED POWER LIGHT IS NOT LIGHTED, HIGH VOLTAGE AC MAY STILL BE PRESENT ON TERMINALS L1 AND L2. NEVER LEAVE THE INSTALLATION WITH THE CONTROL BOX COVER REMOVED.
- ALWAYS TURN OFF THE POWER BEFORE ATTEMPTING SERVICE OF EITHER THE ELECTRICAL OR MECHANICAL SYSTEMS.
- SECURELY ATTACH THE WARNING SIGNS provided with the RS4000 on the gate (one on the outside and one on the inside) where they can be seen by persons in the area of the gate to alert them of automatic gate operation. The installation of the warning signs is a requirement of UL325 and as such failure to install the signs will negate the UL Listing.. If the user refuses to have the warning signs installed, Allstar recommends that you note this on your records and have the user sign a disclaimer. See Figure 4.

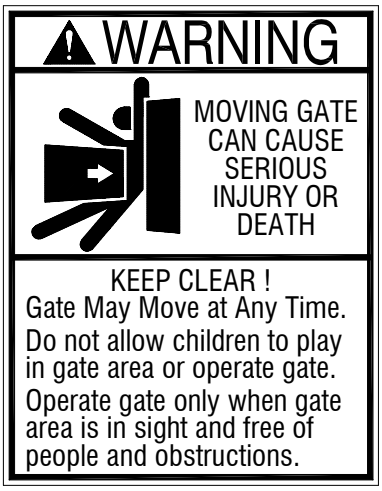

104880

Figure 4

AS THE INSTALLER YOU ARE RESPONSIBLE FOR:

1. **ASSURING THAT THE OWNER/END USER OF THE SYSTEM UNDERSTANDS ITS BASIC OPERATION AND SAFETY FEATURES. IN PARTICULAR, BE SURE THE OWNER/END USER UNDERSTANDS THE LOCATION AND OPERATION OF A MANUAL DISCONNECT (WHERE PROVIDED) OR HOW TO OPERATE THE GATE MANUALLY.**
2. **YOU ALSO HAVE THE PRIMARY RESPONSIBILITY OF INSURING THAT ALL POSSIBLE OPERATIONAL HAZARDS HAVE BEEN CONSIDERED AND ELIMINATED. YOU MUST ADVISE AND WARN THE PURCHASER AND THE ULTIMATE USER OF ANY HAZARDS THAT YOU HAVE NOT BEEN ABLE TO ELIMINATE.**
3. **POINTING OUT TO THE OWNER/END USER OF THE GATE SYSTEM THAT CHILDREN OR PETS ARE NOT ALLOWED TO PLAY ON OR NEAR THE GATE, FENCE OR ANY PART OF THE SYSTEM, AND THAT THE SAFETY INSTRUCTIONS SUPPLIED WITH THIS OPERATOR AND THEIR IMPLEMENTATION ARE THE RESPONSIBILITY OF THE OWNER/END USER.**
4. **LEAVING THE INSTALLATION AND MAINTENANCE MANUAL FOR THIS OPERATOR AS WELL AS ANY ADDITIONAL SAFETY INFORMATION SUPPLIED WITH THIS OPERATOR OR OTHER COMPONENTS OF THE GATE SYSTEM WITH THE OWNER/END USER.**
5. **NOT PLACING IN SERVICE THIS OPERATOR IF YOU HAVE ANY QUESTIONS ABOUT THE SAFETY OF THE GATE OPERATING SYSTEM. CONSULT THE OPERATOR MANUFACTURER.**

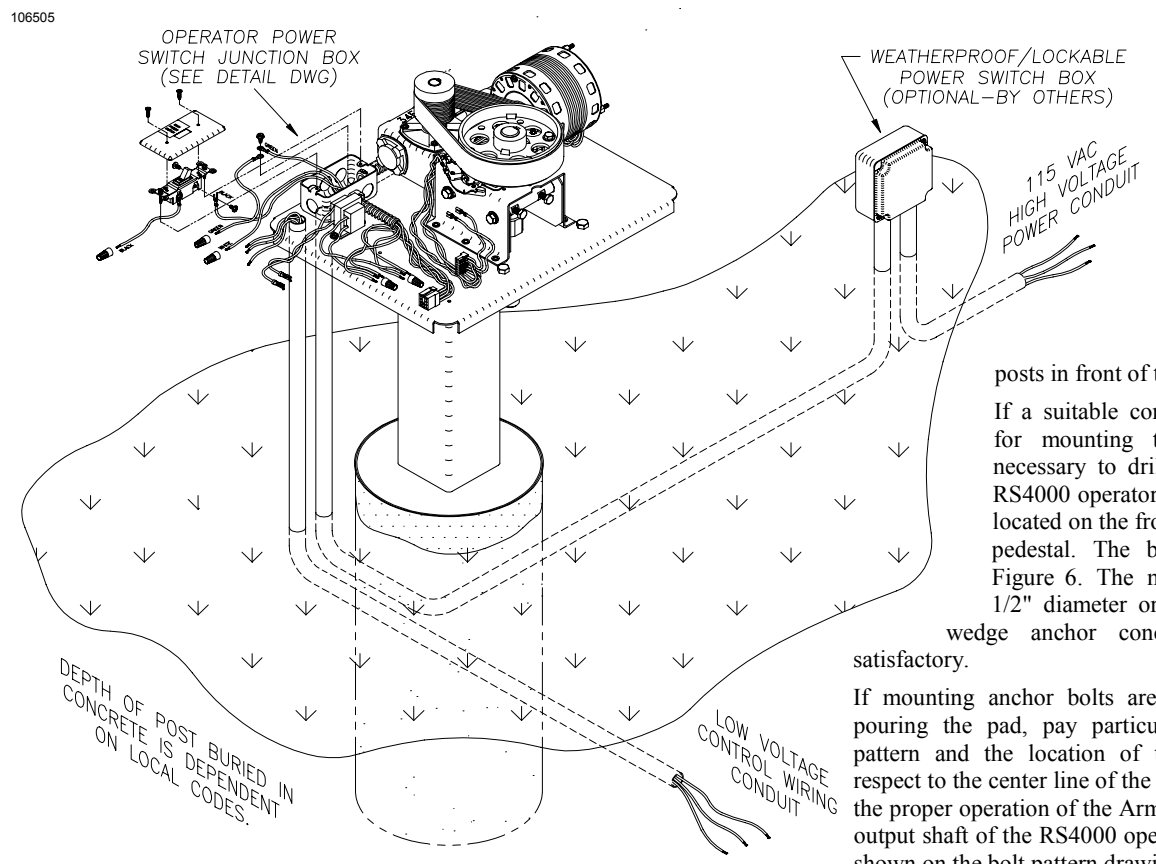

Figure 5: Pad Configuration

installation. ALWAYS FOLLOW LOCAL BUILDING CODES.

If no suitable concrete base exists, a pad must be poured. See Figure 6 for plans for this pad. If the location of the operator is such that vehicles have the potential of hitting the operator, consideration should be given to installation of protective posts in front of the operator.

If a suitable concrete base already exists for mounting the operator it will be necessary to drill mounting holes for the RS4000 operator. 3/4" mounting holes are located on the front and rear of the optional pedestal. The bolt pattern is shown in Figure 6. The mounting bolts should be 1/2" diameter or larger. "Red head" or wedge anchor concrete bolts are usually satisfactory.

If mounting anchor bolts are to be installed prior to pouring the pad, pay particular attention to the bolt pattern and the location of the mounting holes with respect to the center line of the gate hinge. It is critical for the proper operation of the Arm that the center line of the output shaft of the RS4000 operator be located exactly as shown on the bolt pattern drawing, Figure 6.

THE CONCRETE PAD

The standard RS4000 is designed to operate a single leaf gate. Bi-parting gate systems are possible with the addition of a second RS4000 operator. (Consult the factory.) Each RS4000 has its own dedicated control board contained within the operator cover. Care must be taken to provide separate high voltage and low voltage conduits to each operator. (See Figures 5 and 6.) Care must also be taken in choosing proper placement of the conduit to avoid interference with the swinging crank arm which connects to the output shaft. See Figure 8A for basic dimensions and guidelines. Figure 10 illustrates the full sweeping area which the crank arm will encompass in a typical gate installation.

If the optional pedestal kit is used, the Installation of the RS4000 Mechanical Unit will require a suitable concrete pad as a mounting base. The dimensions of the concrete pad should be sufficient to allow at least 5" of clearance from each edge of the pad to the nearest pedestal mounting hole. The top of the pad should be at least 3" above grade to raise the operator above any standing water. The depth of the pad below grade is dependent on the weight and size of the gate and the soil conditions at the site of the

ALTERNATE 4 X 4 POST MOUNT

The RS4000 operator offers an alternative to the optional pedestal kit for mounting installation. A standard architectural 4 x 4 x 1/8 wall steel tube may be substituted for the pedestal and installed in a similar manner to a fence post: Dig a hole of proper diameter (approximately 12") and suitable depth per local codes, and set the 4 x 4 post in concrete. Make sure the post is plumb and level. The top of the post should be cut off clean and square and should extend at least 18"

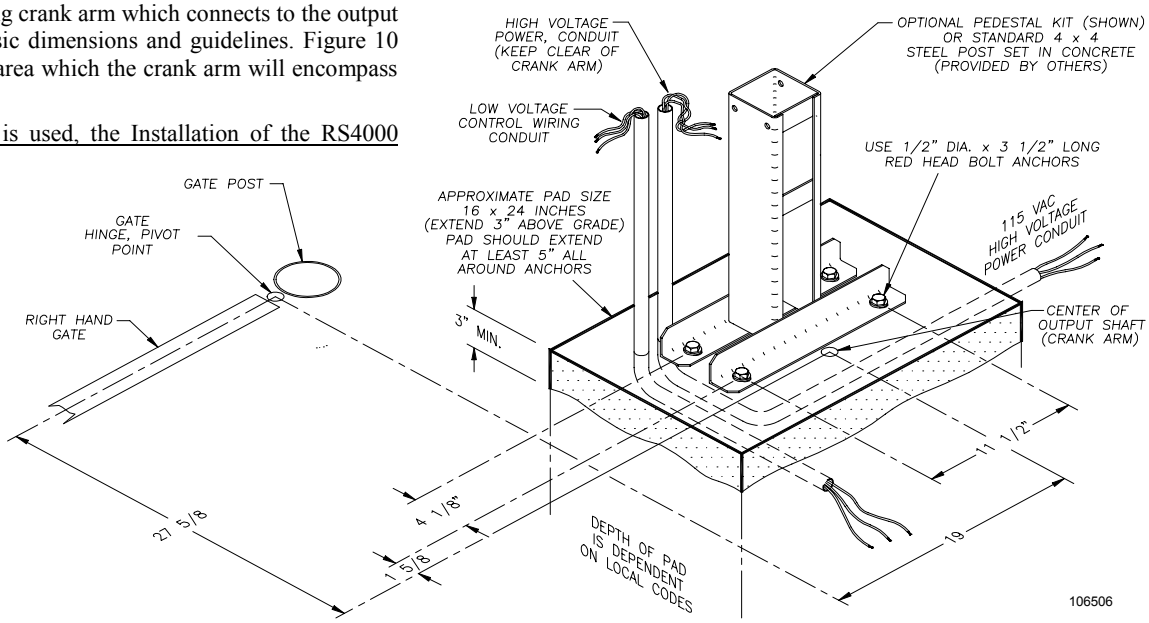

Figure 6: Operator Footprint

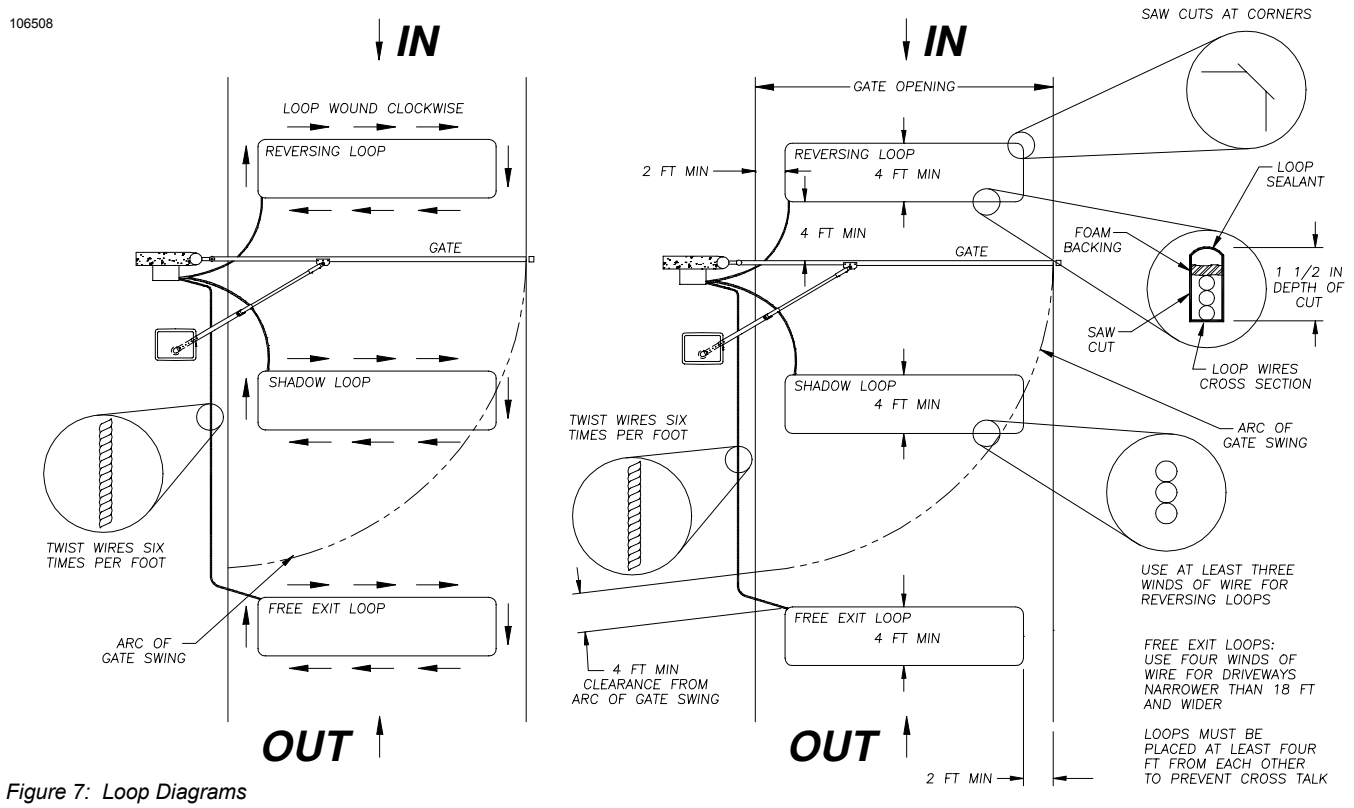

Figure 7: Loop Diagrams

above grade. Two 13/32 diameter holes will need to be drilled on each side of the 4 x 4 tube. Center each pair of holes on the face of the post 2-5/8" apart and 7/8" down from the top. Each pair of holes is to align with the pre-drilled holes in the chassis mounting angles of the RS4000. See Figure 6 for locating the post relative to the gate, noting that the center of the output shaft is located 4 5/8" away from the center of the post, or 2 5/8" away from the face of the 4 x 4 post.

PLACING THE VEHICLE DETECTOR LOOPS

If vehicle detectors are to be used with the RS4000, the "loops" to be buried in the drive should be installed during the site preparation phase of the installation. Proper placement of the vehicle detector wire loops is critical if the loops are to provide satisfactory, extended service. THE MOST IMPORTANT CONSIDERATIONS ARE: 1) PROPER WIRE TYPE AND, 2) GOOD, TIGHT CONNECTIONS FROM THE LOOP TO THE LOOP TERMINATING CONNECTOR. The termination of the loop wires will be at the vehicle detector itself, and not at the RS4000 terminal panel. Observe the wiring diagram supplied by the vehicle detector manufacturer. The vehicle detector may be mounted inside of the RS4000 operator cover, provided there is adequate room. The AC power service delivered to the RS4000 operator may be tapped to provide 115 VAC service to the vehicle detector.

Two different types of loop installations will usually be encountered when placing the loops in the drive: 1) If the driveway material is already in place. saw cuts will be needed in which to place the loop wire. 2) For loops where the paving material will be installed after the loop is positioned, it is necessary to place the loops in Schedule 40 PVC pipe to maintain uniform loop spacing with respect to the surface of the pavement. The loop should be placed 1.5" below the surface of the pavement and at least 2" above any reinforcing steel. The lead-in wires need not be in PVC, but must have at least six (6) twists per running foot.

THE LOOP WIRES MUST BE CONTINUOUS. NO SPLICES OR CONNECTIONS IN THE LOOP ARE TO BE PERMITTED BELOW GROUND. THE ONLY CONNECTION WILL BE AT THE TERMINATION OF THE WIRE AT THE VEHICLE DETECTOR. Above ground splices may be used providing the wire is twisted, soldered and moisture sealed. For best long term results, do not use wire nuts anywhere in the loop system. Connect to the vehicle detector harness by soldering.

For saw-cut installations, observe the methods recommended in Figure 7, above. The saw-cut must be to a depth of 1.5", clean and with no sharp corners. After placing the wires, it is essential that the wires be held tightly in place by a foam backing prior to pouring the sealant. THIS IS ESPECIALLY IMPORTANT WHEN FREEZING IS LIKELY. No voids should exist that will permit the collection of water that might freeze and push the loop wires out of the slot. The sealant used should not be hard setting and should be suitable for pavement material.

<u>THE WIRE USED FOR THE LOOPS MUST BE HEAT AND WATER RESISTANT, CROSS-LINK POLYETHYLENE INSULATED. TYPE XLPE IS BEST. RHW IS O.K. DO NOT USE ANY PVC INSULATED WIRE. (PVC insulation will absorb moisture that may affect Detector operation.) WIRE SIZE SHOULD BE #16 GA. STRANDED OR LARGER.</u>

B: PREPARING THE SITE

VEHICLE DETECTOR LOOP BLANKING FOR SWING GATES

The inside loop for a swing gate installation must be located at least 4 feet outside of the arc of the gate. If it is not, the vehicle detector may detect the gate as it moves over the loop and cause the gate to reopen. If the gate is large and a single leaf, the arc usually requires that the loop be a considerable distance from the closed gate position. This may not be an effective position for the loop. In this case, a “blanking” or “shadow” loop may be used.

A shadow loop detector is connected to the shadow loop terminal (#9) and the “common” terminal (#16) of the RS4000 control panel.

Now, when the gate is in the fully open or closed position the vehicle detector will prevent the gate from closing when a vehicle is over the shadow loop. When the gate is opening or closing, the loop input is disabled.

ELECTRICAL POWER REQUIREMENTS

The RS4000 is a 115 Volt AC gate operator. The AWG wire size for the electrical service is dependant upon the distance from the operator to the service breaker panel. Refer to Table 1 to determine the correct wire size to use. A 15 Amp service is required for each operator unit.

The Nominal Distance column of Table 1 is the maximum recommended distance from the service breaker panel to the operator for a given wire size and voltage. The values in the table are valid for one RS4000 only. The RS4000 will operate at a voltage as low as 105 VAC as measured at the input terminals to the operator. This should be checked as part of the installation procedure.

Class 2 low voltage wiring from external controls such as a key pad, card reader, telephone entry device, etc. must be brought to the RS4000 operator by a separate conduit from the 115 VAC electrical hook up conduit. Low voltage control wires MUST NEVER be routed in the same conduit as the HIGH VOLTAGE power wires.

SERVICE CONDUIT

For new installations the conduit for the High Voltage may be brought to a junction box near where the RS4000 operator will be located or it may be brought directly to the 2 x 4 handy box inside the operator.

WARNING!

AVOID ELECTROCUTION:
DO NOT ROUTE LOW VOLTAGE WIRES IN SAME CONDUIT AS HIGH VOLTAGE WIRES. FOLLOW ALL LOCAL ELECTRICAL CODES OR THE

WIRE SIZE	NOMINAL DISTANCE
#14	100 FT
#12	150 FT
#10	250 FT
#8	400 FT
#6	600 FT
#4	1000 FT
#2	1600 FT

Table 1

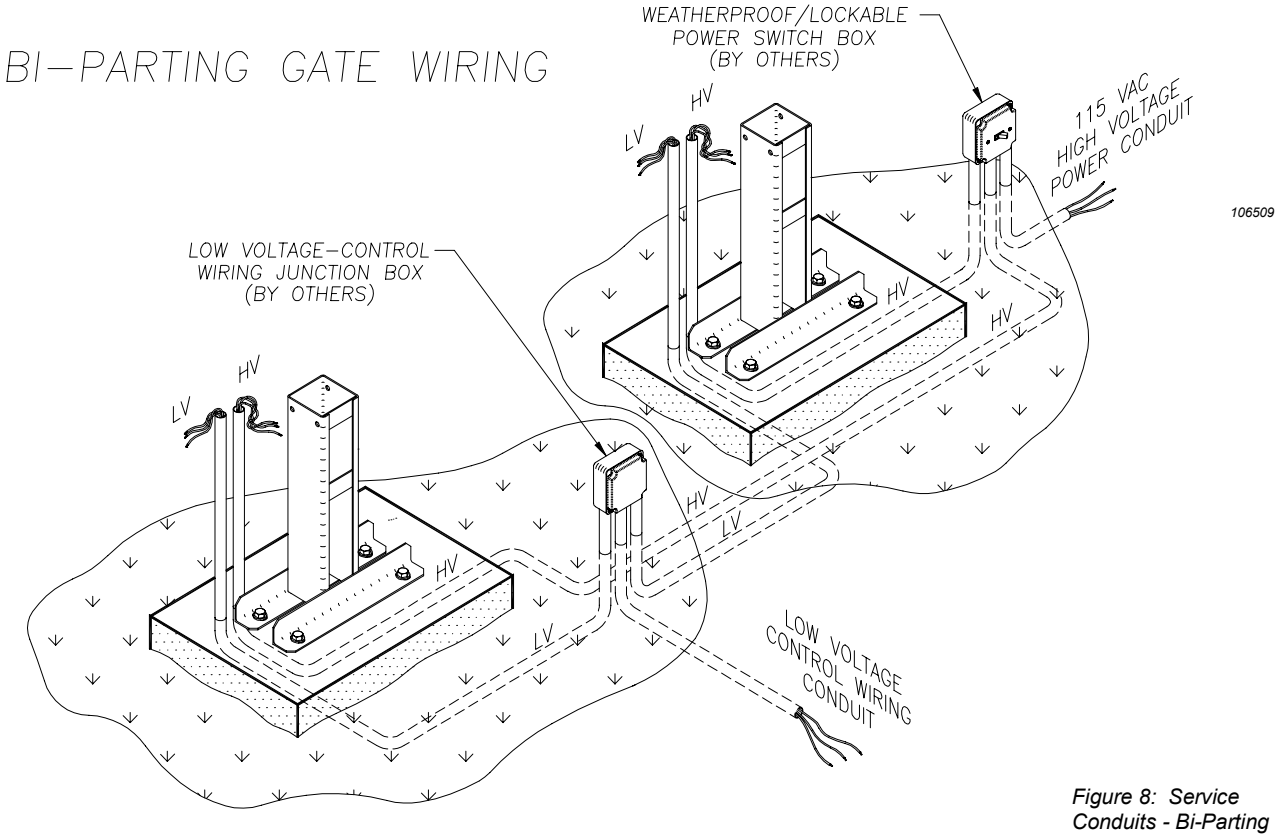

Figure 8: Service Conduits - Bi-Parting

B: PREPARING THE SITE

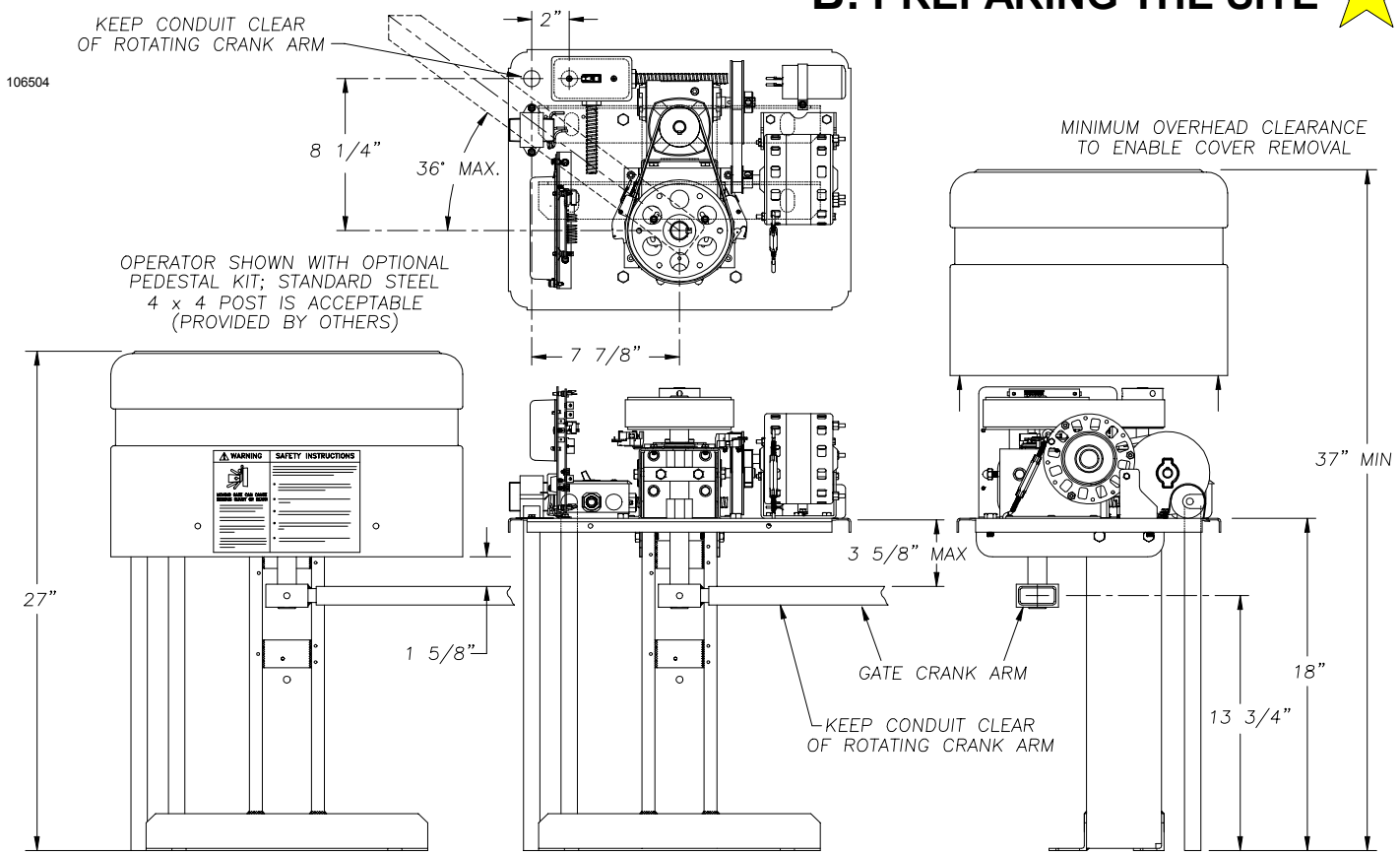

Figure 8A: Service Conduits

C: INSTALLING THE OPERATOR

TOOLS and MATERIALS REQUIRED

The following tools and materials are required for a proper installation of the Twist'R Plus Model RS4000.

1. Wire cutter, stripper and crimping tools for attaching accessory equipment to the control box.
2. #2 Phillips Head screw driver for general use.
3. Medium standard straight blade screw driver for the terminal strip screws.
4. Very small blade screwdriver for adjusting the potentiometer on the gate control board.
5. Electric arc welder or an electric drill with a 3/8" bit for attaching Arm Bracket to the Gate.
6. Several feet of #18 or #22 gauge insulated multistrand wire for connecting accessory equipment to the control panel.
7. Four 1/2" diameter concrete "redhead" anchor bolts with hex nuts, flat washers and lock washers for attaching the Twist'R pedestal. (Not Included)
8. Concrete drill and bit to drill mounting holes for concrete bolts.
9. Multimeter to test line voltage and other measurements as necessary.
10. Small level to level the RS4000 operator at installation.
11. Torque Wrench and 1/2" Socket.
12. 7/16 Socket or Wrench to remove cover bolts.

UNPACKING CHECKLIST

The Twist'R Plus as shipped consists of the components listed below, in two separate shipping boxes. The kits and equipment listed in the Optional Column can be purchased from your dealer.

BOX #1

- Twist'R Plus Operator, complete with gate control board
- Hardware Installation Kit, for pedestal kit or standard 4 x 4 tube mount
- Instruction Kit, with manual, warranty and warning signs.

BOX #2

- Swing Arm Kit
  - Swing Arm
  - Crank Arm
  - Crank Arm Extension
  - Swing Gate Fittings
  - Swing Arm Bracket
  - Swing Arm Padlock
- Hardware Package

OPTIONAL

- Pedestal Kit
- Allstar Radios
- Electric Edges
- Photoelectric Eyes
- Vehicle Detector Loops

106513

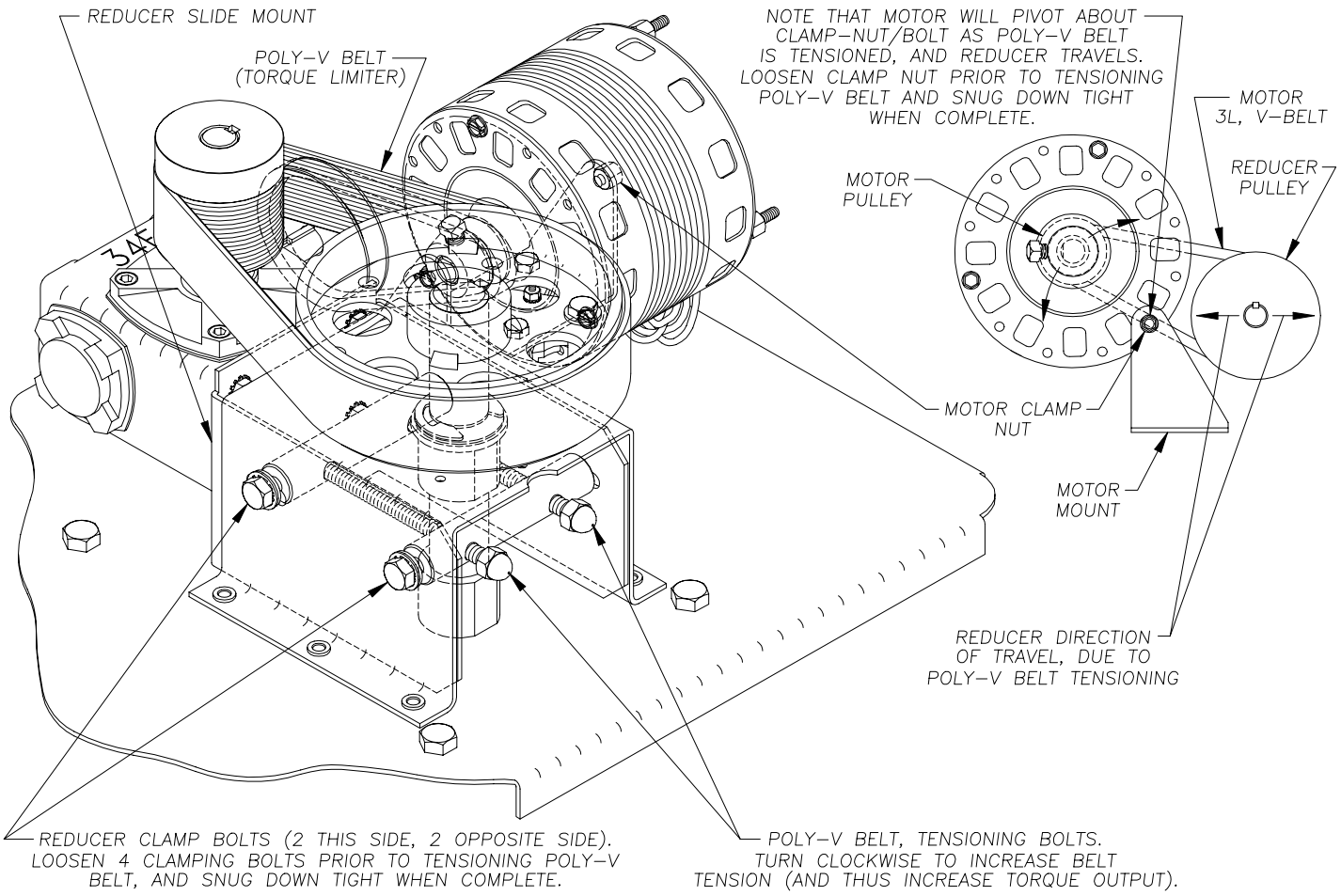

Figure 9: Torque Adjustment

PLACING THE RS4000 PEDESTAL UNIT

Remove the cover from the RS4000 operator by removing the four 1/4-20 diameter bolts that secure it to the chassis. Set the cover aside for the time being.

The recommended procedure for securing the RS4000 pedestal to concrete, or fresh concrete pad (for those installations where the anchor bolts were not previously installed) is to locate and drill the hole for the mounting bolt nearest to the gate post first. Locate this hole by referring to the diagram in Figure 6 for the basic dimensions and gate/operator relationship. After placing a bolt in this pedestal mounting hole, mark and drill the remaining three mounting holes. This can be accomplished with the operator in place.

Before inserting the remaining three bolts, check the pedestal to ensure that it is plumb and level. Flat washers may be used to shim and elevate a low corner. Snug down all four bolts with nuts and lock washers when complete.

For previously placed anchor bolts, the procedure is the same except that the bolts will already be in place. If 1/2" diameter anchor bolts were set, the 3/4" mounting holes on the RS4000 pedestal will allow some adjustment for desired alignment. Washers can be used under low corners to accurately level the unit as above.

TO REVIEW: Make sure the correct position of the pedestal or post from the center line of the gate hinge pivot point to the center line of the RS4000 output shaft is in accordance with the drawing in Figure 6.

After the pedestal or post is securely installed, it is time to mount the RS4000 operator to it. The RS4000 operator has two mounting angles fastened to the bottom of the chassis with two 3/8-16 x 3/4 long bolts, per angle.

Place the RS4000 operator chassis on top of the pedestal/angle assembly, aligning the holes in the angles with the holes in the pedestal. Secure the operator angles to the pedestal with the 3/8-16 x 5 long bolts provided in hardware bag. See Section B for preliminary work required if a 4 x 4 x 1/8 wall structural steel tube post is used instead of the pedestal.

CAUTION!

TO PREVENT DAMAGE TO THE LIMITS, ETC., DURING INSTALLATION OF THE GATE ARM, REMOVE THE LIMIT TRIGGER PIN PRIOR TO INSTALLING THE GATE ARM

INSTALLING THE GATE ARM KIT

The gate arm kit can be installed on the RS4000 only after the operator has been properly and securely installed, and the correct gate/operator geometry relationship has been established and verified. (See Figures 6 and 10.)

Locate the crank arm in the gate arm kit and install it on the output shaft of the RS4000 at the underside of the chassis, oriented so the through hole in the crank arm is aligned with the through hole in the output shaft. The crank arm is secured to the output shaft with a 5/16-18 x 2" long bolt and nylon stopping nut.

Get the crank arm extension from the arm kit and slide it on the crank arm. This assembly can telescope to various arm lengths depending on which pair of holes is used. Six length settings are possible: 33-3/8, 31-7/8, 30-3/8, 28-7/8, 27-3/8 and 25-7/8 inches. Choose the length that is most appropriate for the gate system. Typically, the longer the gate, the longer the arm should be to provide more stable gate handling. Secure the extension to the crank arm with the two 1/4-20 x 1-1/2 inch long bolts, flat washers, lock washers, and nuts provided.

Next, install a gate arm end piece at each end of the pipe as shown in Figure 10. The length of this arm is also variable depending on where the end pieces are snugged down with the four 5/16-18 x 5/8 inch long square head set screws (two, each end piece). The length of the gate arm pipe may also be cut to length to suit the needs of the gate system, although this is not recommended, because a longer arm will promote more stable gate operation.

Install the gate bracket through the eyelet of the arm end piece and secure it in place with the 1/2-13 x 2" long bolt as shown in Figure 10, using the two flat washers and Nylok nut provided.

The RS4000 operator was designed with an Adjustable Torque Output Drive. ("ATD") (See Figure 9.) For initial installation of the gate arm, the drive should be adjusted to zero torque, so the crank arm will swing freely. This is accomplished by loosening (do not remove) the two reducer-slide clamp bolts on each side of the shaft support tower. To prevent accidental damage to the limits, etc., the trigger pin should be removed at this time as shown in Figure 18. The tension on the flat poly-v adjustable torque drive belt can now be relieved a small amount at a time until the large pulley installed on the output shaft will just slip when the crank arm is manually rotated. The tension is increased or decreased by turning the cap-nutted tensioning bolts as shown in Figure 9. Note: The capnuts have been permanently installed on the threaded shank and will not loosen or un-thread).

Next, manually swing the crank arm to the position shown for a closed gate in Figure 10. Now install the gate arm pipe assembly on the end of the crank arm by dropping the end piece eyelet over the protruding sleeve of the crank arm extension, as shown. Swing the gate arm assembly around until it is straight in line with the crank arm, and the "elbow" is up against the closed position stop.

Swing this locked arm assembly around until the gate bracket just meets the gate as shown in Figure 10. Elevate or lower the arm assembly until it is level, and then temporarily clamp the gate bracket to the gate. The "elbow" pivot of the gate arm assembly should be secured with the 1/2-13 x 2-3/4" long bolt, with flat washers and lock nut, provided.

Now manually move the gate to the fully opened position, moving cautiously at first, to ensure there is no interference between gate arm components or the operator/pedestal. Slight adjustments to the gate bracket location or arm length may be necessary to ensure smooth operation. Make several trial runs by manually moving the gate from closed to opened positions, until a smoothly operating gate system is assured. When satisfied, weld or bolt the gate bracket to the gate and remove the clamps.

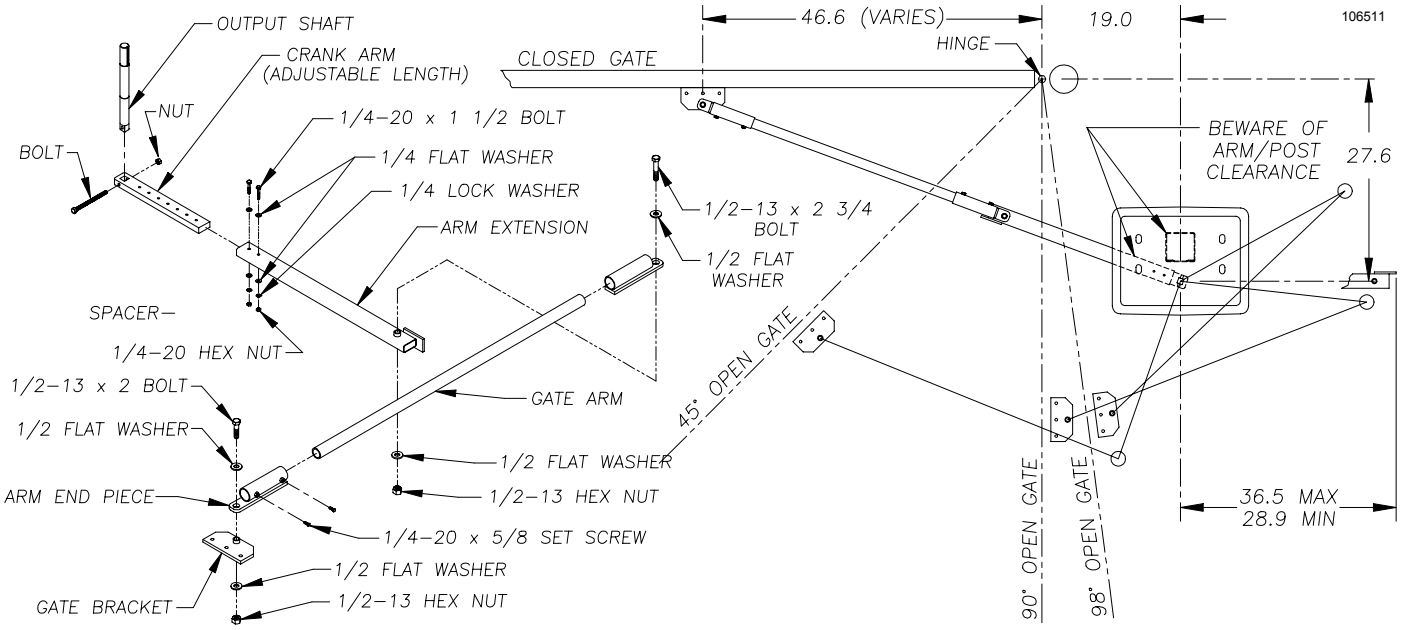

Figure 10: Arm Positions

C: INSTALLING THE OPERATOR

RNING!

**RISK OF ELECTROCUTION.
DO NOT BEGIN THE ELECTRICAL CONNECTION PROCEDURES UNTIL THE POWER IS TURNED OFF AT THE CIRCUIT BREAKER**

RNING!

TO AVOID ELECTRICAL DAMAGE TO THE OPERATOR DO NOT ALLOW TOTAL WIRE LENGTH FROM THE SERVICE BREAKER PANEL TO THE TWIST'R OPERATOR TO EXCEED THE WIRE LENGTH GIVEN IN TABLE 1, PAGE 8.

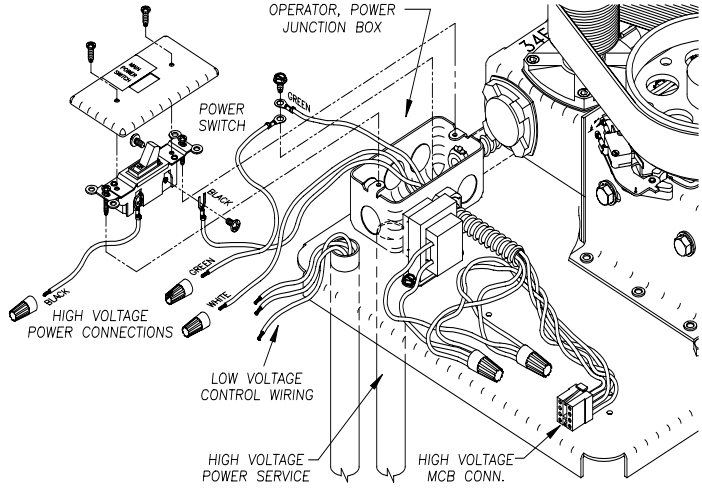

Figure 11: Handy Box Illustration

CONNECTING THE OPERATOR TO THE ELECTRICAL SERVICE

It will be necessary to run two conduits to the RS4000. One will be used for the A-C power lines and another for the low voltage, class 2 wiring. See Figure 8. There are cutouts on the bottom of the Operator Chassis to accept these two conduits.

The high voltage RS4000 electrical connections are made at the 2 x 4 handy box located inside the operator at the rear, left corner along with the main power switch. Conduit should be run from the service breaker panel to this junction box as discussed in Section B, along with the appropriate AWG wire (see Table 1). The color code for 115 VAC is:

black = hot white = neutral green = ground

Connections for the 115 VAC service should be made according to the schematic wiring diagram, Figure 12, and handy box illustration shown in Figure 11.

Starting at the RS4000 2 x 4 handy box proceed as follows:

1. The BLACK wire attaches to the 115 VAC HOT wire, normally black.
2. The WHITE wire attaches to the 115 VAC NEUTRAL wire, normally white.
3. The GREEN wire attaches to the GROUND wire, normally green.

It is good electrical practice to ground the frame of the RS4000 operator and is required by National and/or local electrical codes.

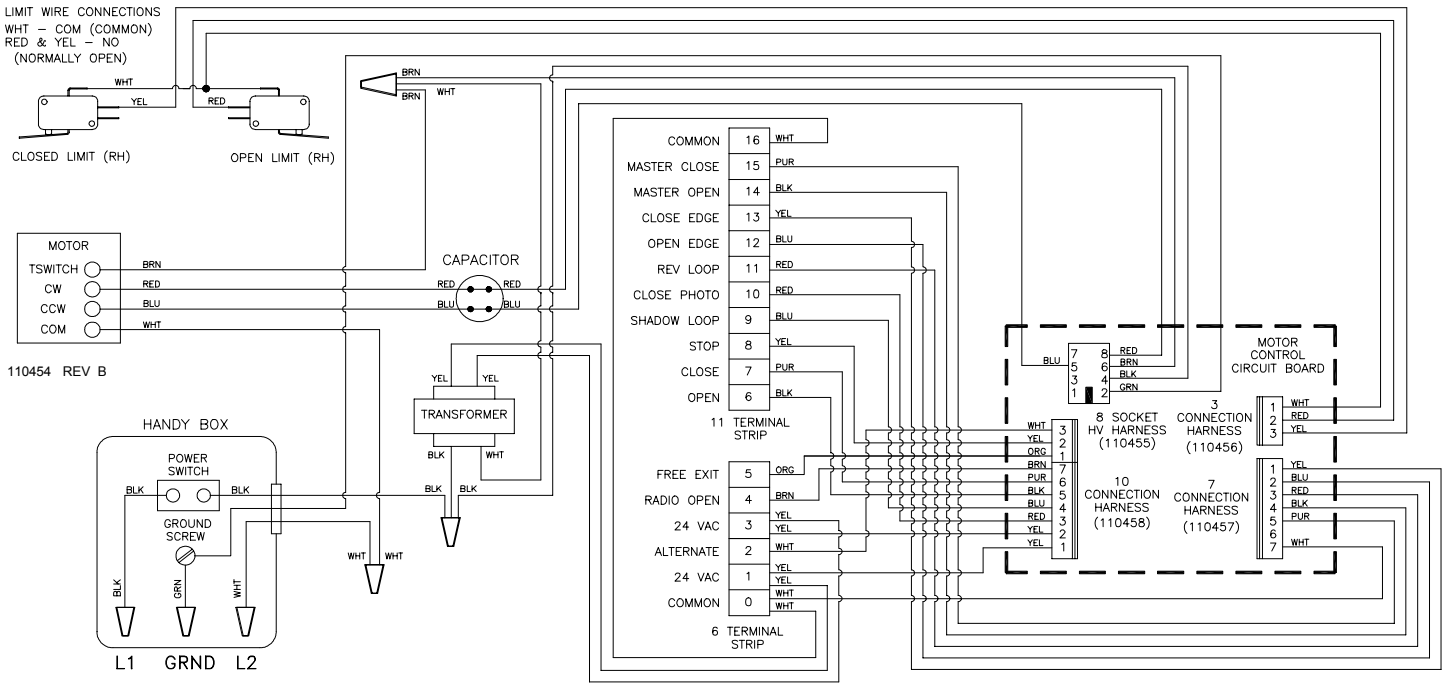

Figure 12: Schematic & Wiring Diagram

LIGHTNING PROTECTION

For areas where a high probability of ground lightning strikes exists (Florida, Georgia, etc.,) additional lightning protection should be installed in the RS4000. Although it may not be possible to protect against all strikes, additional protection will substantially reduce the occurrence of lightning damage. Allstar's lightning data indicates that the most strikes enter the RS4000 through the power lines. Effective protection requires that the surge current from the lightning strike be shunted to ground. This must be done without raising the potential of the circuitry in the RS4000, with respect to ground, to the levels that will damage the solid state circuitry. Lightning strikes generate enormous currents for very short periods of time. Unfortunately, the period of time is long enough to damage solid state components and many times, other components. The key to success is a very low resistance path from the surge protector to ground for these currents in addition to a surge protector that will act fast enough to protect the solid state circuitry. Several manufacturers offer suitable surge protectors.

WARNING!

TO REDUCE THE RISK OF DAMAGE DUE TO LIGHTNING, ENSURE A SOLID GROUND FROM THE TWIST'R GROUND WIRE IN THE SERVICE ENTRANCE 2 x 4 HANDY BOX TO THE ELECTRICAL SERVICE GROUND OR TO A EARTH GROUND STAKE NEAR THE TWIST'R.

RIGHT HAND AND LEFT HAND INSTALLATION

The RS4000 operator is wired at the factory for **RIGHT HAND** operation. Right hand operation is described as the gate swinging in and to the right and where the operator is mounted to the right of the gate leaf - both as you look at the installation from the inside (secured side). See Figure 4 for a pictorial example of a right hand operation.

Left hand operation is described as the gate swinging in and to the left and where the operator is mounted to the left of the gate leaf - both as you look at the installation from the inside (secured side). Figure 7 diagrams depict gates and operators in a left hand set-up.

Note the different wiring configurations for right-hand installations and left-hand installations (see Figure 13). To change to a different handed operation the capacitor wires and limit wires must be changed. For proper operation, the limits and capacitor must be wired as shown.

SYNCHRONOUS OPERATION (MASTER/ SLAVE)

Two RS4000 units in a bi-parting situation (one wired right-hand and one wired left hand, see above) can be configured to operate in a synchronous manner. The units can be wired together to operate as one system, with one unit controlling the movement of both. Additionally, the installer can customize the installation of the external entrapment protection devices. These devices can be wired to the primary (controlling) operator or alternately to the individual units as the situation dictates or the end user requires.

When an external entrapment protection device is wired to the primary unit (such as would be recommended for a photoelectric beam across the entire opening) both units will react to the detection of an obstruction, regardless of the location of the obstruction. An edge device (or similar) protecting an entrapment zone particular to the secondary unit could be wired to that unit only and would react individually to the detection of an obstruction. Synchronous movement would resume once the obstruction is cleared and an open or close command is received by the primary operator.

To obtain synchronous operation (4 Steps):
1. Wire the Primary Operator Terminal #14 to Terminal #6 in the Secondary Operator.
2. Wire the Primary Operator Terminal #15 to Terminal #7 in the Secondary Operator.
3. Place the Master/Slave Jumper on the Primary Operator motor control board to the primary (Master) position. See Figure 19, Page 18.
4. Place the Master/Slave Jumper on the Secondary Operator motor control board to the secondary position. See Figure 19, Page 18.

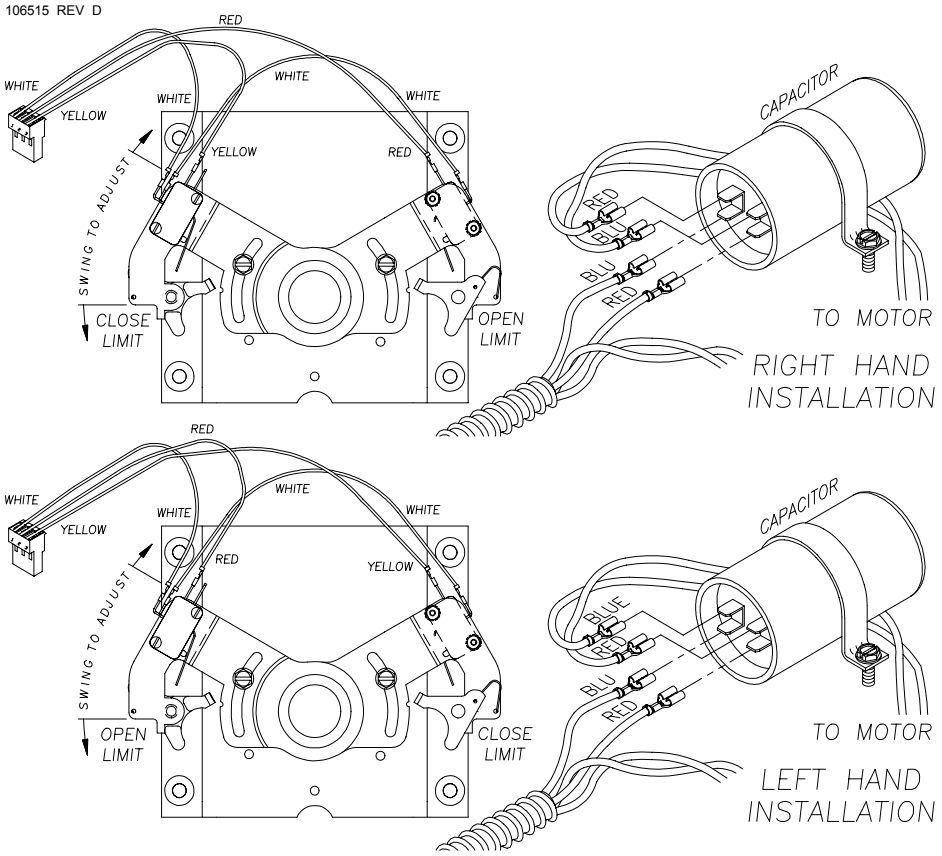

Figure 13: Left/Right Hand Installation Limit & Motor Wiring Diagram

C: INSTALLING THE OPERATOR

ACCESSORY EQUIPMENT HOOK-UP

All accessory equipment is connected to the terminal strips located on the control panel of the RS4000.

There are 11 command inputs available to the installer on the RS4000 in addition to 2 commons. To trigger any of these inputs, a switch or relay closure to the common terminal for a duration longer than 100 milliseconds and of a resistance of less than 100 ohms is necessary. See the INPUT COMMANDS Reference Chart on Page 16 for an explanation of each of the inputs.

The RS4000 has a transformer mounted on the chassis to power accessory equipment. The maximum power that can be supplied by this transformer is 5VA or about 1/4 Ampere at 24VAC. This is only intended to supply power to a radio receiver. A Separate power supply is required for loop detectors or card or key pads.

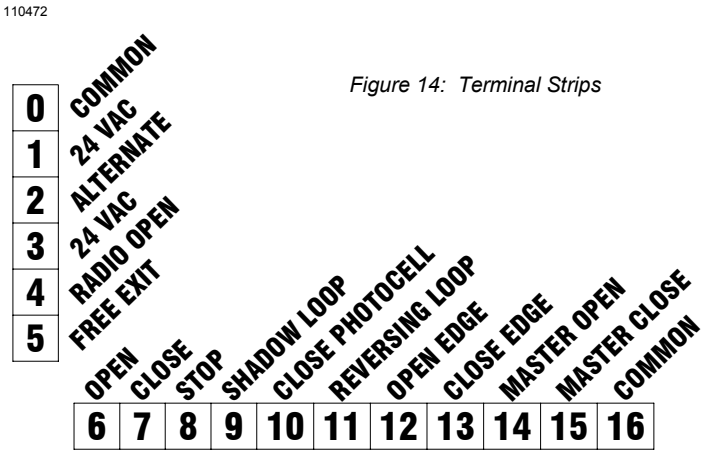

Figure 14: Terminal Strips

WIRING RADIO RECEIVERS

Radio Receivers may be either 3 wire (terminal) or 4 wire units. THE 3 TERMINAL VERSION OF THE RECEIVER IS PREFERRED SINCE NO ADDITIONAL CONNECTIONS TO THE RECEIVER WILL BE REQUIRED. See Figure 15.

THREE TERMINAL RECEIVERS

If a three wire receiver is to be used, the #1 terminal of the receiver is normally COMMON to both the auxiliary transformer (power input) and the radio relay. Most radio manufacturers label this terminal as 24 VAC. Connect a wire from the #1 terminal of the radio receiver to terminal #1. The #2 terminal of the radio receiver is normally the relay contact of the receiver. Connect a wire from this #2 terminal of the radio receiver to the #2 terminal (RADIO RELAY) of the RS4000 control panel. The #3 terminal of the radio receiver is usually labeled RADIO POWER and is connected to 24 VAC. Connect to terminal #3 of the RS4000 control panel.

FOUR WIRE RECEIVERS

Four wire receivers replace the "spade" terminals on the RECEIVER with 4 wires. These wires are typically color coded. The instructions with the receiver must be carefully followed to properly connect the receiver. For any 4 wire receiver, two of the wires will be for power input and two will be for the relay contacts. Connect the two wires for the power input to each side of the 24VAC RS4000 terminals #1 and #3. Connect one of the two wires for the relay to terminal #1 (COMMON) and the other wire to terminal #2 (RADIO RELAY) on the terminal strip. See Figure 16 for connecting 4 wire receivers.

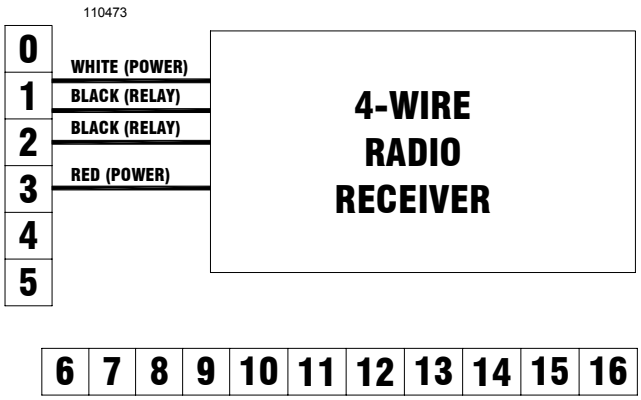

Figure 16: Wiring 4-Wire Receiver

WIRING A 3-BUTTON STATION

NOTE: THREE BUTTON STATIONS MAY BE ORDERED WITH THE STOP BUTTON AS NORMALLY OPEN OR NORMALLY CLOSED. **THE RS4000 WILL OPERATE ONLY WITH A NORMALLY *OPEN* STOP BUTTON.** See Figure 17 for instructions on wiring a three button station.

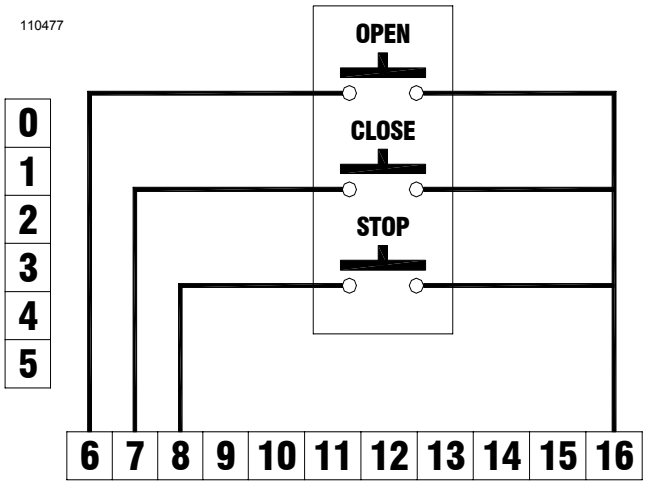

Figure 17: Wiring 3-Button Station

WIRING A KEYPAD, CARD READER OR TELEPHONE ENTRY SYSTEM

These devices activate the RS4000 by a relay contact closure within the device. Typically, two wires or terminals are provided by the device to operate the gate. Follow the manufacturers instructions on locating these connections. If one of the connections at the device is

WARNING!

IMPROPER WIRING COULD CAUSE ELECTROCUTION OR DAMAGE TO CIRCUITRY. FOLLOW ALL LOCAL ELECTRICAL CODES OR THE NATIONAL ELECTRICAL CODE.

labeled as COMMON, then connect this to Terminal #1 or #0 of the RS4000 control panel. Connect the other contact to one of the following terminals depending on function desired: Terminal #2 (ALTERNATE), Terminal #4 (RADIO OPEN), Terminal #5 (FREE EXIT), Terminal #6 (OPEN) or Terminal #7 (CLOSE). If no identification of the connections is noted at the device, then the two wires may be connected to terminals #1 and one of the terminals above (again depending on desired function) in any order.

Keypads, Card Readers and Telephone Entry Systems are typically located remotely from the RS4000. The wiring used is low voltage CLASS 2. Be sure to run an independent conduit for this wiring from the entry device to the RS4000. The wire size should be #16 or #18 stranded for ease of handling.

WIRING VEHICLE DETECTORS

There are three connections that need to be made; 1) the AC power to the detector, 2) the control connection to the RS4000, and 3) the connection to the loop. All these connections will be made at the vehicle detector connector. Follow the wiring instructions provided by the vehicle detector manufacturer.

VEHICLE DETECTOR POWER

Vehicle detectors may be ordered for 115 VAC or 24 VAC operation. Allstar recommends that a 115 VAC Vehicle Detector be used. The 115 VAC may be obtained from the electrical service to the RS4000 operator .

CONNECTING THE VEHICLE DETECTOR TO THE RS4000

For a REVERSING LOOP connection of the vehicle detector, the "relay" or "presence" output of the detector will be connected to Terminal #11 (REV LOOP) of the RS4000 and the COMMON wire will be connected to Terminal #0 or #16 (COMMON) of the RS4000. As long as a relay closure is present on these two lines, the RS4000 will not allow the gate to close. If the gate is opening, the gate will continue to open. If the signal is removed before the Timer to Close times out, the gate will close after the Timer to Close has completed its cycle.

For a FREE EXIT connection of a Vehicle Detector, the RELAY or PRESENCE output signal will be connected to Terminal #5 (FREE EXIT) and the RELAY COMMON signal connected to Terminal #0 or #16(COMMON) of the RS4000. DO NOT CONNECT THE FREE EXIT OUTPUT SIGNAL TO ANY OTHER TERMINAL, SUCH AS RADIO RELAY, BECAUSE THE GATE WILL CLOSE AFTER REACHING THE OPEN LIMIT AND THE TIMER TO CLOSE HAS COMPLETED ITS CYCLE, EVEN THOUGH THE VEHICLE HAS NOT EXITED THE FREE EXIT LOOP.

WARNING!

RISK OF ENTRAPMENT!
TO REDUCE THE RISK OF INJURY OR DEATH: LOCATE KEYPAD, CARD READER, KEY SWITCH OR SIMILAR ENTRY DEVICES IN A LOCATION WHERE A USER CAN NOT REACH THROUGH THE GATE OR FENCE TO ACTIVATE THE GATE OPERATOR. THE RECOMMENDED DISTANCE BETWEEN THE GATE OR FENCE AND ACCESSORY SWITCH IS 10 FEET.

TERMINAL STRIP REFERENCE CHART

#	NAME	DESCRIPTION
0	COMMON	Common connection for low voltage signal inputs, terminals 2 thru 15.
1	24 VAC	Provides maximum 10 VA auxiliary power for accessories.
2	ALTERNATE	Momentary input, must be released and re-entered to be recognized.
This input is used for “COMMAND OPEN/COMMAND CLOSE” applications. The 1st signal will cause the gate to begin opening. A 2nd signal received during the open cycle will stop the gate immediately. A 3rd signal will close the gate. Connect appropriate access control devices to this terminal and #0 or #16 COMMON.		
3	24 VAC	Provides maximum 10 VA auxiliary power for accessories.
4	RADIO OPEN	Momentary input, must be released and re-entered to be recognized.
Once activated the gate will open fully. Activation while the gate is closing will cause it to re-open.		
5	FREE EXIT	Momentary or continuous input.
Once activated the gate will open fully. Activation while the gate is closing will cause it to re-open. Continuous activation while the gate is open will prevent the Timer-To-Close function from automatically closing the gate.		
6	OPEN	Momentary or continuous signal. On/ Off mode set by Switch #1
Once activated the gate will open fully. Activation while the gate is closing will cause it to re-open. Continuous activation while the gate is open will prevent the Timer-To-Close function from automatically closing the gate. Continuous signal required to move the gate when in the alarm mode.		
7	CLOSE	Momentary or continuous signal. On/ Off mode set by Switch #1
Once activated the gate will close fully. Activation while the gate is opening has no effect. Continuous signal required to move the gate when in the alarm mode.		
8	STOP	Momentary or continuous signal.
Overrides all other signals. Once activated, the gate will immediately stop and await a new command. If the STOP input is continuously activated, the gate will not move.		
9	SHADOW LOOP	Momentary or continuous signal.
This input is active only when the gate is at rest in the fully OPEN position, it has no effect on the gate when fully closed or when closing or opening. Continuous activation will prevent the gate from moving in the close direction. When the input is removed normal operation is resumed. This input is intended for a vehicle loop detector to sense a vehicle in the gate path. Connect here and to terminal #16 COMMON. Multiple devices may be connected in parallel.		

D: STARTING THE OPERATOR

TERMINAL STRIP REFERENCE CHART

#	NAME	DESCRIPTION
10	CLOSE PHOTO	Momentary or continuous signal.
This input is active only when referenced to the closing direction, it has no effect on the gate when opening or about to open. If activated when the gate is closing the gate will stop, pause and reverse in the open direction for 1/2 second (approx. 2 inches) and stop. Continuous activation will prevent the gate from moving in the close direction. When the input is removed normal operation is resumed. . Continuous activation while the gate is open will prevent the Timer-To-Close function (if enabled) from automatically closing the gate. This input is intended for photoelectric eye systems and other non-contact devices as appropriate. Connect here and to terminal #16 COMMON. Multiple devices may be connected in parallel.		
11	REV LOOP	Momentary or continuous signal.
This input is active only when the gate is closing or when it's fully open and the Close Timer is operative. All stand-alone vehicle detectors, photo-eyes and active edges should be connected here and to terminals #3 or #13 COMMON. Multiple devices may be connected in parallel.		
12	OPEN EDGE	Momentary or continuous signal.
This input is active only when referenced to the opening direction, it has no effect on the gate when closing or about to close. If activated when the gate is opening the gate will stop, pause and reverse in the close direction for 1/2 second (approx. 2 inches) and stop. Continuous activation will prevent the gate from moving in the open direction. If a second activation occurs before the limit switch is activated the gate will stop and a require a renewed, intended input to move in the open direction and before an automatic activation device (timer, etc.) will operate. This input is intended for Electric Gate Edge systems and other minimum-contact devices as appropriate. Connect here and to terminal #16 COMMON. Multiple devices may be connected in parallel.		

#	NAME	DESCRIPTION
13	CLOSE EDGE	Momentary or continuous signal.
This input is active only when referenced to the closing direction, it has no effect on the gate when opening or about to open. If activated when the gate is closing the gate will stop, pause and reverse in the open direction for 1/2 second (approx. 2 inches) and stop. Continuous activation will prevent the gate from moving in the close direction. Continuous activation while the gate is open will prevent the Timer-To-Close function (if enabled) from automatically closing the gate. If a second activation occurs before the limit switch is activated the gate will stop and a require a renewed, intended input to move in the close direction and before an automatic activation device (timer, etc.) will operate. This input is intended for Electric Gate Edge systems and other minimum-contact devices as appropriate. Connect here and to terminal #16 COMMON. Multiple devices may be connected in parallel.		
14	MASTER OPEN	Momentary or continuous signal. Master (output configuration)
This terminal is used to coordinate two independent systems (two control box/mechanical unit combinations controlling separate gate leaves). Connects to terminal #6 (OPEN) in the companion control box and controls the direction of movement in the companion box (Switch Jumper Position diagram, Figure 19, Page 18).		
15	MASTER CLOSE	Momentary or continuous signal. Master (output configuration)
This terminal is used to coordinate two independent systems (two control box/mechanical unit combinations controlling separate gate leaves).Connects to terminal #7 (CLOSE) in the companion control box and controls the direction of movement in the companion box (Switch Jumper Position diagram, Figure 19, Page 18).		
16	COMMON	Common connection for low voltage signal inputs, terminals 2 through 15.

SETTING THE LIMIT SWITCHES

Once the gate arm has been installed to the gate and operator, the limit switches can be adjusted and set. BE CERTAIN TO TURN THE MAIN POWER SWITCH TO THE OPERATOR "OFF" BEFORE PROCEEDING.

The instructions in this manual describe a right hand gate installation, as shown in Figure 10. A right hand gate installation is defined as a gate which swings inward and to the right to an open position, with the operator on the right, as viewed from inside of the gate area facing out. The RS4000 as shipped is configured for a right hand installation. If a left hand installation is required, the limit switch wires and motor wires must be swapped. This is fully defined in the right hand/left hand wiring schematic illustrated in Figure 13.

Assuming a right hand gate installation, swing the gate to position it a few inches short of the fully closed position. In this right hand installation, the "closed" gate limit will be located on the left side of the output shaft (see Figure 18).

WARNING!

RISK OF ELECTROCUTION
DO NOT BEGIN TO SET THE FOLLOWING ADJUSTMENTS UNTIL THE POWER IS TURNED OFF AT THE TWIST'R CONTROL BOX

The limit mechanism consists of a spring loaded flipper toggle which activates a micro switch. These are installed on a bracket which pivots around the output shaft. A trigger pin, installed on the large output pulley, is used to flip the toggle and thus activate or de-activate the micro switch. With this mechanical combination, the switching action is positive and precise. This accuracy is not diminished by repeated operations of the gate.

Identify the small trigger pin mounting hole closest to the "close" limit located toward the front side of the pulley between the "open" and "close" limit brackets. Manually swing the gate open until this

Figure 18: Limit Adjustments

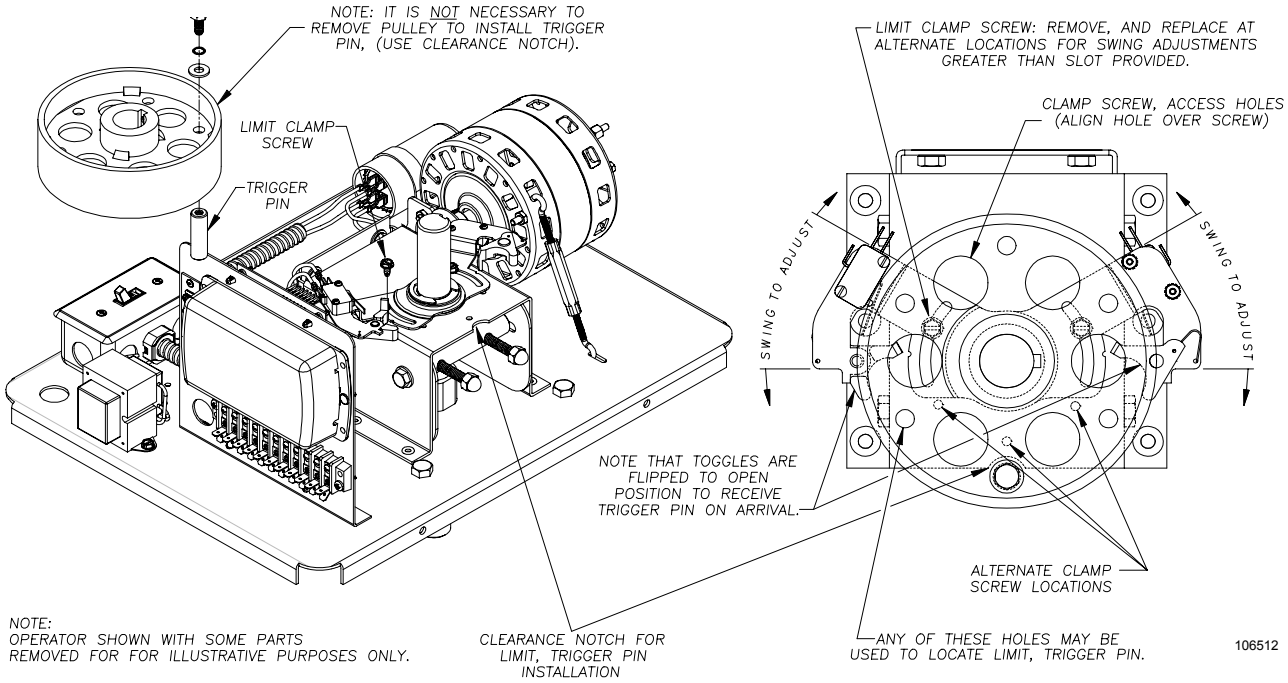

mounting hole is positioned directly above the clearance notch provided in the shaft support tower (see Figure 18). This notch provides the appropriate clearance to install the limit trigger pin with the bolt and washers provided. Install the trigger pin firmly in place.

Flip the toggle open so it is positioned to receive the trigger pin. Swing the gate to a position that is just a few inches short of the fully closed position. Now swing the "close" limit bracket around the output shaft toward the trigger pin until the toggle just trips to "close" the micro switch.

The limit brackets are provided with a slot so that they can slide freely about the limit clamp screw. It may be necessary to relocate this clamp screw to bring this slot within the range of the trigger pin. Alternate clamp screw locations have been provided for this purpose.

Flip the "open" limit toggle toward the trigger pin so that it is ready to receive. Manually swing the gate to a position that is just short of the fully "open" position. Now swing the "open" limit bracket around the output shaft toward the trigger pin until the toggle just trips to "close" the micro switch.

Lock the positions of the limit brackets by gently snugging the limit clamp screws in place.

NOTE: These are the rough settings for the "open" and "close" limits. Final adjustment will be made after the Adjustable Torque Drive system has been set.

SETTING ADJUSTABLE TORQUE DRIVE

The RS4000 operator incorporates an Adjustable Torque Drive to limit the amount of force that the gate arm can exert. This provides the additional flexibility to fine tune the output of the gate system.

BEFORE BEGINNING THIS PROCESS, BE SURE THE MAIN POWER SWITCH TO THE OPERATOR IS *OFF*.

Output torque can be increased by turning the belt tensioning bolts in a clockwise direction. To decrease torque, reduce the belt tension by turning the tensioning bolts in a counter-clockwise direction. This allows a controlled slipping action to occur between the flat Poly-V belt and the large output pulley, similar to that of a clutch mechanism.

Before turning the tensioning bolts, it is necessary to loosen the four (4) reducer slide clamp bolts (two each side of the shaft support tower), and the motor mount clamp nut (see Figure 9). Loosening the motor mount clamp nut allows the motor/pulley to pivot. Gravity will tension the V-Belt as the reducer slide moves in and out of the shaft support tower.

BE SURE POWER IS STILL OFF!

Tension the Poly-V belt by small increments by turning the tensioning bolts as a balanced pair. After tensioning the Poly-V belt, test the grip between the belt and drive pulley by applying manual pressure against the gate and estimating the resistance by the operator before slipping occurs.

When the desired resistance is achieved, tighten the four reducer slide clamp bolts. Evaluate the motor drive belt tension by applying a moderate downward pressure on the belt midway between the two pulleys. If an excessive amount of deflection occurs, loosen the clamp nut slightly and apply a slight downward pressure to the motor. The motor drive belt can be further tensioned by turning the body nut of the turnbuckle. Turn clockwise to increase belt tension. Do not over tension. This turnbuckle will also help to maintain motor belt tension and facilitate easy re-adjustment should the belt stretch with age. Re-tighten the motor clamp nut.

Additional adjustments may be necessary after the RS4000 operator has been powered up and is fully operable.

Now that the Adjustable Torque Drive has been set, limit settings obtained in the previous section must be fine tuned. Move the limit brackets a degree at time while cycling the operator. Note the gate's actual stopping position. Continue to adjust the limit brackets by very small increments while cycling the operator until the exact stopping position desired is reached. Lock the limit brackets in place by snugging the limit clamp screws. ***Test and adjust the Torque Drive setting on a regular basis (at least once per month).***

D: STARTING THE OPERATOR

TIMER TO CLOSE SETTING

The Timer to Close is controlled by the setting of the "AUTO CLOSE TIMER" potentiometer on the control board, see Figure 19. When the pot is adjusted fully counter-clockwise the Timer-To-Close is disabled. Turning the pot approximately 1/4 turn clockwise will enable the Timer To Close function with a delay of approximately 2 seconds between the gate reaching the full open position and automatically closing. To increase the time delay continue to turn the pot in the clockwise direction to a maximum delay of 60 seconds (one minute).

IT IS HIGHLY RECOMMENDED THAT AUXILIARY ENTRAPMENT PROTECTION DEVICES BE INSTALLED WHENEVER THE TIMER TO CLOSE OPTION IS ENABLED.

APPLYING POWER TO THE OPERATOR

PRE-POWER CHECK LIST

Before applying power to the RS4000 operator for the first time, go through the following check list to ensure that all is in order **before** the application of power.

1. Check that the RS4000 power switch is off.
2. Check that the breaker at the power panel is on.
3. With a voltmeter on the proper scale, check that the line voltage at the input to the RS4000 is the voltage that is expected. Connection of a 115 VAC RS4000 to an unexpected 230 VAC line is a common occurrence. This will cause readily identifiable board failure that **WILL NOT BE COVERED UNDER WARRANTY**.
4. Manually move the gate to the center of the gate opening.
5. Make sure the adjustable torque drive (ATD) is properly set to just overcome a load of slight to moderate force applied to the gate. Follow the procedures outlining the ATD on Page 17, Section C, if readjustment is necessary.
6. The proper Left-or Right-hand or Bi-Parting wiring has been completed.
7. The Limit Switch brackets have been preliminarily set.
8. No other auxiliary devices should be connected to the terminal strip until the powering-up procedures are completed.

RUNNING THE RS4000

Turn ON the main power switch. The gate should not move. If the gate moves in either direction or continues to run, turn off the power and call Factory Service for assistance. Follow the instructions below for first time commands and the Basic Operation Guide on the following page for ongoing operation.

1. Give the RS4000 a command to open by touching a jumper wire connected to Terminal #16 (COMMON) to Terminal #6 (OPEN). The gate should move to the fully open position.
2. If the TIMER TO CLOSE option has been enabled, the timer will activate the gate to close within the set time parameter on the potentiometer. If not give the RS4000 a command to open by touching a jumper wire connected to Terminal #16 (COMMON) to Terminal #7 (CLOSE).
3. Allow the gate to close and note the position of the gate.

If the gate stops short of the desired fully open or closed position or if it bangs against the end stops, TURN OFF THE MAIN POWER and reset the appropriate Limit Switch. After you have attained the final adjustment, run the RS4000 open and closed several times to ensure that the positions set will be retained.

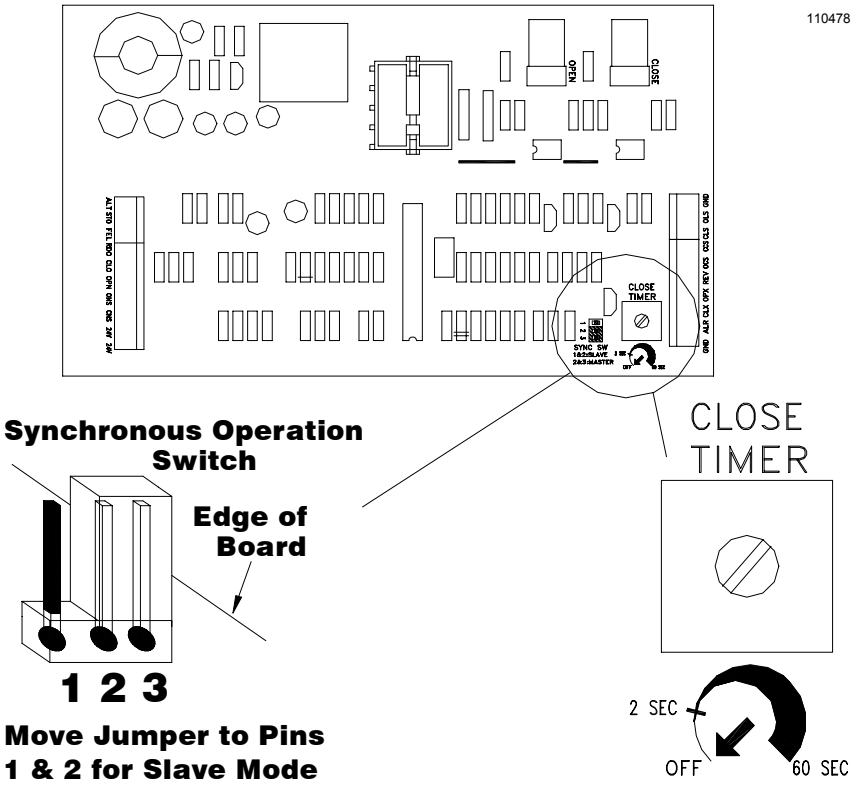

LOCATION OF AUTOCLOSE TIMER ADJUSTMENT AND SYNCHRONOUS OPERATION SWITCH

Figure 19: Timer Adjustment and Synchronous Switch Location

D: STARTING THE

MAXIMUM RUN TIMER

SMART™ Self adjusting MAximum Run Timer (Patent Pending)

The RS4000 has a **S**elf adjusting **MA**ximum **R**un **T**imer, SMART™ (patent pending). The amount of time for the first few cycles of operation are registered and averaged within the motor controller circuitry. After the first few initial cycles, if the gate is activated and no other command is given or an end limit (open or close) is not reached in the previously counted cycle time plus approximately 4 seconds, the operator will be turned off.

FINAL SETTING OF THE CLOSE TIMER

To alter the amount of time that the Close Timer will hold the gate open, adjust the timer potentiometer located on the control board. See Figure 19.

The Close Timer is adjustable from 2 to approximately 60 seconds. Turning the potentiometer **clockwise increases** the delay; turning it **counterclockwise decreases** the delay.

E: INSTALLATION NOTES FOR AUXILIARY EQUIPMENT

You are now ready to install and connect the auxiliary equipment. INSTALLATION STEPS DETAILED IN SECTIONS A, B, C AND D MUST BE COMPLETE BEFORE PROCEEDING.

1. **Vehicle Detectors:** If a Vehicle Detector (Safety Loop) is to be a part of this installation, start with this first. Connect the Vehicle Detector to AC power and the Loop in accordance with the Manufacturer's instructions and the information contained in this manual. Do not connect to the terminal strip of the RS4000 at this time. Test the Vehicle Detector independently using the presence lamp on the front panel of the detector and a metal plate over the loop. When you are satisfied that the Detector is working properly, connect the output wires to the "REVERSING" terminal on the control panel of the RS4000.

   Give the gate an open command and allow the Timer to Close to start the gate to close. Place the metal plate over the Loop and observe that the gate reopens.

2. **Shadow Loop:** See Section B regarding Vehicle Detector Loop Blanking for Swing Gates.

3. **Free Exit:** If a "FREE EXIT" Detector is installed, connect the output wires of this Detector to the Terminal #5 (FREE EXIT). It is acceptable to have more than one device connected to the same Terminal. Place the metal plate over the FREE EXIT LOOP and observe that the gate opens to the fully open position. Leave the metal plate on the loop for at least one minute. Observe that the gate does not close. Remove the plate from the Loop and observe that the gate closes. (Some Vehicle Detectors will "tune out" a constant obstruction to the loop after 15 to 30 minutes.)

4. **Installing other entry devices:** After you are satisfied that all the loops are functioning properly, proceed with the installation of the additional devices, such as a Radio Receiver, Telephone Entry or Key Pad. Connect the Radio Receiver to the Radio Terminal. Observe the precautions regarding radio receivers described on page 15. Other entry devices **MUST** be connected to the appropriate terminal (See pages 15 & 16 for terminal descriptions). The recommended minimum distance between the gate or fence and an accessory input device is 10 feet.

F: END USER INSTRUCTIONS GATE OPENER OPERATION AND SAFETY

WARNING! **IMPORTANT SAFETY INSTRUCTIONS. TO REDUCE THE RISK OF SEVERE INJURY OR**

BASIC OPERATIONAL GUIDE

- If the gate is fully closed an Open Button, Alternate, Radio or Free Exit input will cause the gate to begin moving in the open direction.
- If the gate is fully open a Close Button, Alternate, or Radio input will cause the gate to begin moving in the close direction.
- If the gate is moving in a Close direction a Close Non-Contact Sensor or a Close Contact Sensor input will cause the gate to stop, pause and reverse for approximately 2 inches in the Open direction.
- If the gate is moving in a Close direction an Open Button, Radio, Reversing, or Free Exit Loop input will cause the gate to stop, pause and reverse and run in the Open direction.
- If the gate is moving in a Close direction a Stop Button or Alternate input will cause the gate to stop. A subsequent Alternate input will cause the gate to begin moving in the Open direction.
- If the gate is moving in an Open direction an Open Non-Contact Sensor, Open Contact Sensor input or an Open Overload activation will cause the gate to stop, pause and reverse for approximately 2 inches in the Open direction.
- If the gate is moving in an Open direction a Stop or Alternate input will cause the gate to stop. A subsequent Alternate input will cause the gate to begin moving in the Close direction.

MANUAL OPERATION FEATURE: The gate can be moved open or close in case of power failure or other need to move the gate manually from any position except fully closed without disconnecting the operator arm. Remove power from the unit (if not already off) and firmly grasp the leading edge of the gate. Push or pull the gate in the direction desired. The amount of force required to move the gate will depend on the setting of the adjustable torque drive, the gate weight, and the inherent friction of the overall system. Manual Operation is to be attempted only when the operator is not moving under power.

To the Owner/End User of Allstar's Twist'R:

Thank you for choosing an Allstar product. We are confident you will have many years of use and satisfaction with your gate operator.

Our Twist'R operator is part of your unique gate operating system, which may consist of a variety of components, including the gate, the gate tracks, posts, and electronic safety enhancement features. These components combined present certain risks and safety issues of which you, the end user, must be aware.

Each unique system presents a unique set of hazards which we cannot possibly address individually. These instructions will help you to identify the potential risks and safety issues your gate system presents, and guide you as you make your system as safe as possible for everyone who uses it.

Your first step is to consider the intended use of the gate system, who will be using the gate system, and in what manner the system is installed. You should have a clear understanding of how often the gate will be opened, who will be opening it, whether children and the general public will be near the gate system, and how close the gate system is to public property. Once you have answered these questions, you are ready to decide what safety enhancement measures must be taken to avoid injury.

To minimize the risk of entrapment in your gate system, have the following safety enhancement features installed where appropriate:

- Electric gate reversing edges
- Enclosed tracks
- Vertical guard posts
- Protective screen mesh
- Photoelectric sensors
- Instructional and precautionary signs
- Covers for exposed rollers

ALL APPROPRIATE SAFETY ENHANCEMENT FEATURES MUST BE INCORPORATED INTO YOUR GATE SYSTEM.

Each safety enhancement feature is a separate component in your gate system. Read and follow all instructions for each of the components of your unique system. **Ensure that all instructions for mechanical components, safety enhancement features and the Allstar Twist'R are available for everyone who will be using your gate system.**

The two warning signs shipped with your Twist'R Operator (See Figure 2, Page 4 of this manual) must be installed in prominent positions on both sides of your gate. Keep them clean and legible.

Read and follow the safety points on the following page which present the basic guidelines for the safest operation of your gate operator system.

SAVE THESE INSTRUCTIONS !

PRECAUTIONS FOR PEDESTRIAN TRAFFIC OR RESIDENTIAL AREAS.

The internal operator overload sensor may not be adequate entrapment protection in all situations to prevent arm, leg, or hand injuries. Padded electric gate edges, pneumatic gate leading edges, or photoelectric sensors are therefore necessary when automatic gates are used near pedestrian traffic. See the figure below. **Use of a pedestrian walk gate is mandatory where there is nearby pedestrian traffic.**

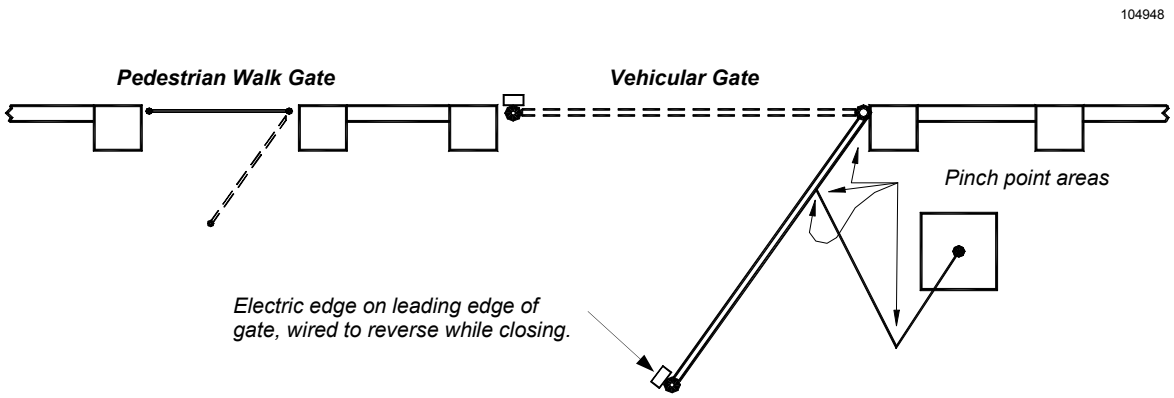

Figure 22: Entrapment Protection

AVOID ENTRAPMENT: Stay away from the **path** of the gate and all moving parts (gate arms, etc.) at all times. Keep clear of the pinch points identified below.. Install guards or other safety enhancement features to prevent access to pinch point areas. Install guards on open

PREVENT PERSONAL INJURY OR DEATH: Do not stand near or on the gate. Gate may be activated without notice. Do not allow anyone to "ride" the gate, or place arms or legs through the gate. The force of the gate can cause serious personal injury or death. No one should cross the path of a moving gate.

NO CHILDREN OR PETS ALLOWED: Never allow a child to operate gate controls, "ride" a gate, or play in the area of a gate. **Install and store all controls out of children's reach**. Also, pets must be kept away from the gate. Install a pedestrian gate in applications where children or pets need access.
This entrance is for vehicles only. Pedestrians must use a separate entrance.

KEEP GATE IN SIGHT: Never activate the gate unless it is in sight. Install mounted controls in full view of the gate. Be sure the gate area is clear before activating the gate, and watch the gate and gate area as the gate is in motion.

LOCATE MANUAL CONTROLS SAFELY: A manual control such as a pushbutton or keyswitch must be included in your gate system design to be used if automatic controls such as radio controls or loop detectors do not function. Carefully consider the placement of the manual control: It must be ***out of reach of the gate*** so that no one pushing the button or inserting the card is in the path of the gate or moving parts; it must also be ***within sight of the gate*** so that the operator can watch the gate and gate area during operation. The recommended minimum distance between the gate or fence and manual control accessory is 10 feet.

INSTALL SAFETY ENHANCEMENT DEVICES: In residential applications or in areas where pedestrians may be present, or if your gate closes automatically, be sure an electric edge(s) and/ or a photoelectric sensor(s) has (have) been installed and is/are operating properly. These features are intended to detect pedestrian traffic and avert injury or entrapment.

Loop detectors may be installed to detect vehicular traffic and prevent vehicular damage.

MAINTAIN THE GATE AND GATE HARDWARE: A damaged gate or one that cannot be easily opened and closed manually must be repaired before installing a gate operator. A poorly operating gate may cause the load sensing device of the operator to fail, causing a risk of entrapment. ***Never overtighten the clutch or load sensing device to compensate for a poorly swinging gate.*** Correct all mechanical problems on the gate and gate hardware before installing the gate operator. Have a qualified service technician make repairs to the gate.

MAINTAIN ALL COMPONENTS OF GATE SYSTEM: Follow the maintenance instructions included with the gate, the gate operator, and the safety enhancement features and/or accessories that make up your gate operator system. Have a professional service technician perform any adjustments or maintenance to the components. ***Fully test all safety enhancement features monthly.*** Discontinue the use of faulty safety equipment immediately, and have the equipment serviced or replaced by a qualified service technician The gate must reverse on contact with a solid, rigid object or when an object activates the non-contact sensors. After adjusting the force or limits of travel, retest the gate operator. Failure to adjust and retest the gate operator properly can increase the risk of injury or death.

KNOW YOUR OPTIONAL GATE ARM DISCONNECT FEATURE: In the event of a power outage and the gate in a fully closed position, you may need to manually operate your gate. The RS4000 is optionally equipped with a keyed padlock to permit the gate arm to be manually disconnected from the RS4000 operator. This will allow you to manually push the gate open or close as needed. Be sure to have the service technician or dealer installing your gate system give you the key to the padlock and show you how to use this feature quickly and safely. Keep the key in a safe, accessible place.

KNOW YOUR GATE MANUAL OPERATION FEATURE: The gate can be moved open or close in case of power failure or other need to move the gate manually from any position except fully closed without disconnecting the operator arm. Remove power from the unit (if not already off) and firmly grasp the leading edge of the gate. Push or pull the gate in the direction desired. The amount of force required to move the gate will depend on the setting of the adjustable torque drive, the gate weight, and the inherent friction of the overall system. Manual operation is to be attempted only when the operator is not moving the gate under power.

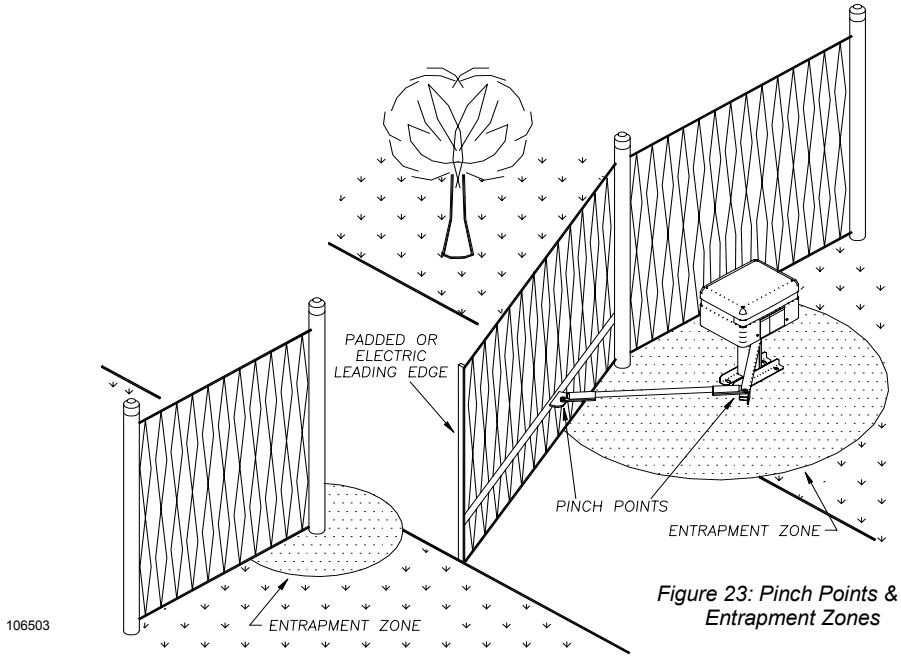

Figure 23: Pinch Points & Entrapment Zones

TWIST'R EXPLODED VIEW

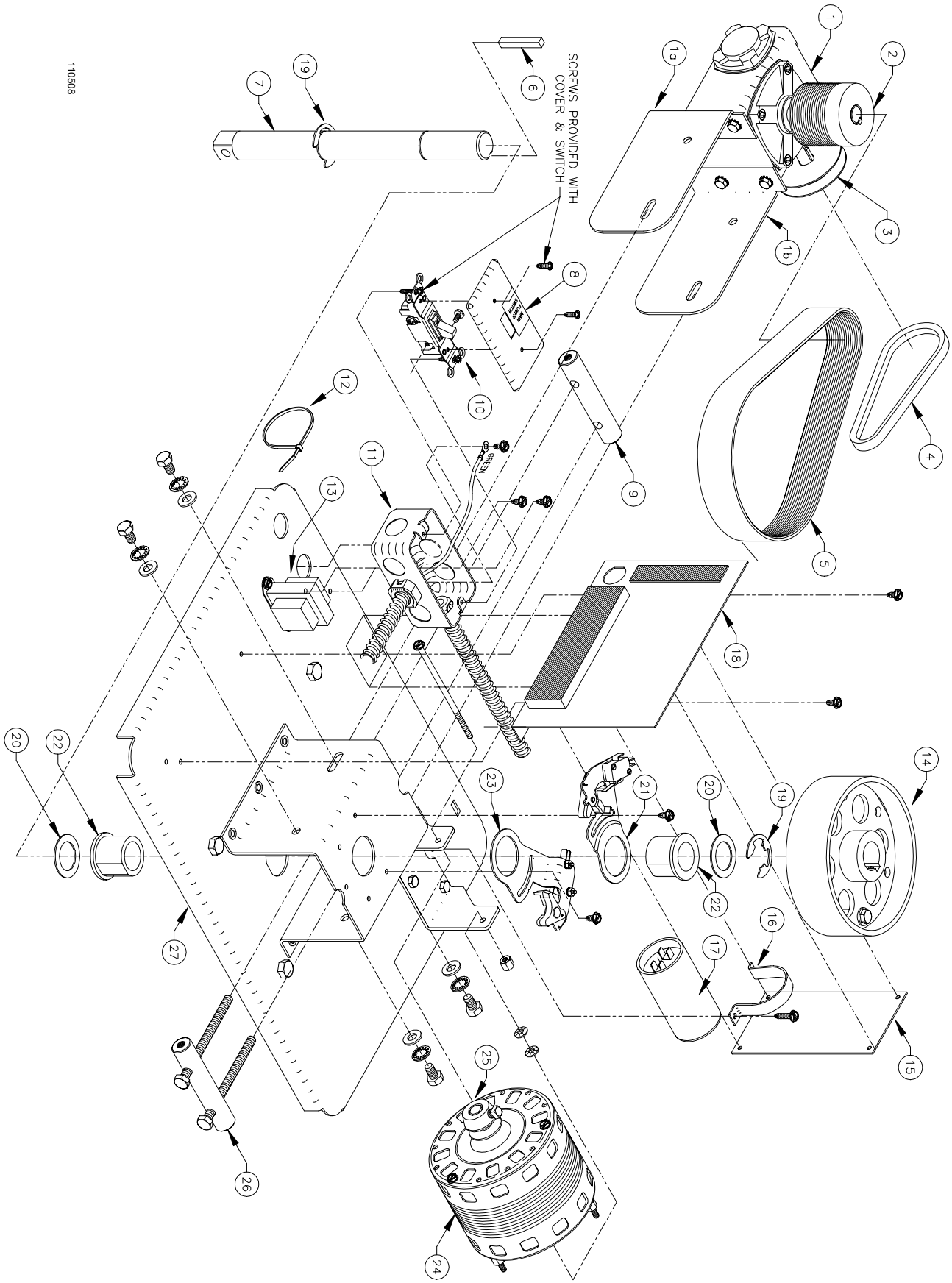

Figure 24: Twist'R Operator Exploded View

TWIST'R PARTS LIST

ITEM	QTY.	PART #	DESCRIPTION
1	1 EA	103918	REDUCER, SPEED, 60:1
1a	1 EA	110674	BRACKET, REDUCER SUPPORT, LEFT
1b	1 EA	110673	BRACKET, REDUCER SUPPORT, RIGHT
NS	NLA	103994	BRACKET, REDUCER, U, ONE PIECE
2	1 EA	103911	PULLEY, POLY VEE, 2.2 P.D.
3	1 EA	104050	PULLEY,3L,2.5 P.D. X .5 BORE
4	1 EA	104049	VEE BELT,3L140
5	1 EA	103989	POLY VEE BELT
6	1 EA	104450	SQUARE KEY
7	1 EA	103996	OUTPUT SHAFT, 1 IN. DIA
8	1 EA	106568	HANDY BOX COVER ASSEMBLY
9	1 EA	104020	LIMITED SLIP TENSIONER BAR
10	1 EA	106635	MAIN POWER SWITCH ASSEMBLY
11	1 EA	106566	POWER SWITCH BOX ASSEMBLY
12	1 EA	105411	WIRE TIE
13	1 EA	005244	TRANSFORMER, 40 VA, 120-24 VAC
14	1 EA	104893	OUTPUT PULLEY ASSEMBLY
15	1 EA	110130	MOTOR CONTROL BOARD

ITEM	QTY.	PART #	DESCRIPTION
16	1 EA	104482	CAPACITOR BRACKET
17	1 EA	005120	CAPACITOR
18	1 EA	110507	BACKPANEL ASSEMBLY, CGA2K
19	2 EA	105550	SNAP RING
20	2 EA	105525	WASHER
21	2 EA	104229	LEFT BRACKET LIMIT ASSEMBLY
22	1 EA	100487	BEARING
23	1 EA	104230	RIGHT BRACKET LIMIT ASSEMBLY
24	1 EA	005192	MOTOR, 50-11, 115V, 42 FR,PSCs
25	1 EA	100494	PULLEY, MOTOR, .5 ID, 1.25 OD, 3L
26	1 EA	104227	TENSIONER BAR ASSEMBLY
27	1 EA	104225	BASE/CHASSIS ASSEMBLY
NS	1 EA	109094	TURNBUCKLE, 3/16 x 5 1/2, HK END
NS	1 EA	104235	COVER ASSEMBLY
NS	1 EA	110455	HI VOLTAGE HARNESS
NS	1 EA	110456	LIMIT/DIRECTIONAL HARNESS (3 PIN)
NS	1 EA	110457	OBSTRUCTION WIRE HARNESS (7 PIN)
NS	1 EA	110458	INPUT HARNESS (3 PIN & 7 PIN)

NS - NOT SHOWN NLA - NO LONGER AVAILABLE

TWIST'R ARM KIT EXPLODED VIEW LIST

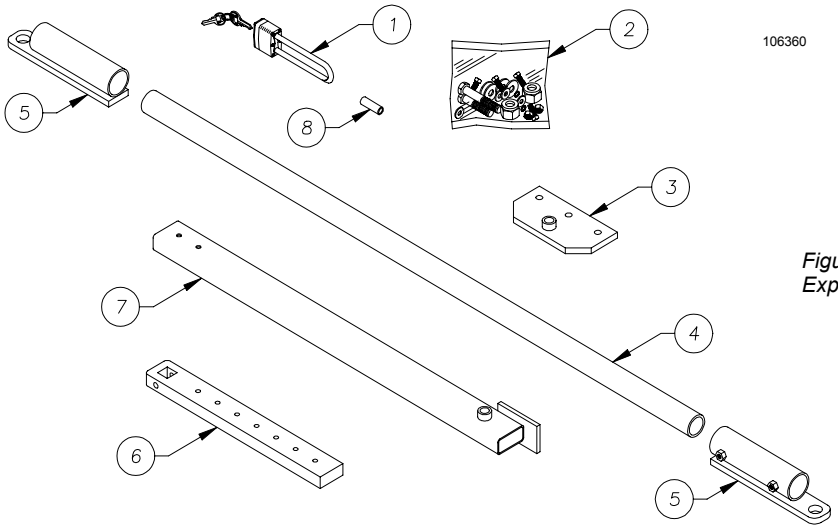

Figure 25:Gate Arm Kit Exploded View

ITEM #	PART #	DESCRIPTION
1	010667	PADLOCK WITH KEYS (OPTIONAL)
2	102928	HARDWARE BAG, ARM KIT
3	104476	TWIST'R ARM BRACKET
4	104448	TWIST'R ARM

ITEM #	PART #	DESCRIPTION
5	104475	TWIST'R ARM FITTING
6	104875	TWIST'R CRANK ARM
7	104473	TWIST'R CRANK ARM EXTENSION
8	SPACER	SPACER FOR PADLOCK (OPTIONAL)

TECHNICAL SPECIFICATIONS

PHYSICAL

PAD: *16" x 24" x 3" Elevation or 4 x 4 Post*

OVERHEAD CLEARANCE: *Minimum 12"*

UNIT SIZE: *19"W x 14-1/2"L x 11"H*

COVER: *One-Piece Molded Polyethylene with no*

SHIPPING WEIGHT: *51 lbs.*

ELECTRICAL

PRIMARY VOLTAGE: *115 VAC, 60 Hz, 1P*

ELECTRICAL SOURCE: *One 3-Wire 15 Amp Service*

CONTROL VOLTAGE: *5VDC*

RADIO RECEIVER POWER: *24VAC*

MOTOR: *1/2 HP 5.0 AMP PSC*

AUTO TIMER-TO-CLOSE: *Adjustable 5-30 Seconds*

DRIVE

DRIVE SYSTEM: *60:1 Via V-Belt, Motor Drive, Gear*

FINAL SPEED: *3.3 RPM*

OUTPUT SHAFT: *1" Diameter from bottom of chassis*

LIMITS: *Independent Open/Close; Radial Swing Switches*

CAPACITIES

MAX. GATE WEIGHT: *300 lbs.*

MAX. GATE WIDTH: *16 ft.*

MAX. CYCLES PER HOUR: *10*

SWING: *Maximum Rotation 105°*

GATE SPEED: *Approx. 7 Seconds to Open 90°*

Specifications subject to change without notice. Consult the factory.

Allstar

Manufacturer's Limited Warranty

Allstar warrants its gate operators to be free from defect in material and workmanship for a period of five (5) years from the date of purchase for single family home use and three (3) years from the date of purchase for multi-family and commercial use. This warranty covers all components except the electronic circuit boards which are warranted for three (3) years from the date of purchase for single family home use and two (2) years from the date of purchase for multi-family and commercial use. To obtain service contact your dealer.

To obtain service under this warranty the buyer must obtain authorization instructions for the return of any goods from Allstar before returning the goods. The goods must be returned with complete identification, with copy of proof-of-purchase, freight prepaid and in accordance with Allstar's instructions or they will not be accepted. In no event will Allstar be responsible for goods returned without proper authorization or identification.

Goods returned to Allstar for warranty repair within the warranty period, which upon receipt by Allstar are confirmed to be defective and covered by this limited warranty, will be repaired or replaced at Allstar's sole option, at no cost and returned pre-paid. Defective parts will be repaired or replaced with new or factory rebuilt parts at Allstar's sole option.

This limited warranty does not cover non-defect damage, damage caused by unreasonable use, damage caused by improper installation or care, vandalism or lightning, fire or excessive heat, flood or other acts of God (including, but not limited to misuse, abuse or alterations, failure to provide reasonable and necessary maintenance), labor charges for dismantling or reinstalling a repaired or replaced unit, or replacement batteries.

These warranties are in lieu of all other warranties, either expressed or implied. All implied warranties of merchantability and/or fitness for a particular purpose are hereby disclaimed and excluded. Under no circumstances shall Allstar be liable for consequential, incidental or special damages arising in connection with the use or inability to use this product. In no event shall Allstar's liability for breach of warranty, breach of contract, negligence or strict liability exceed the cost of the product covered hereby. No person is authorized to assume for Allstar any other liability in connection with the sale of this product.

This warranty gives you specific legal rights. You may also have other rights which vary from state to state. Warranty effective after August 1st, 2000.

c.p. Allstar Corporation
Downingtown, PA 19335

This Gate Operator is built in the USA in accordance with requirements of Underwriters' Laboratories Standard UL-325, Fourth Edition as amended March 1, 2000.
P/N 110138 Rev. D June 2003